A	B	C	D	E	F	G	H	J	K

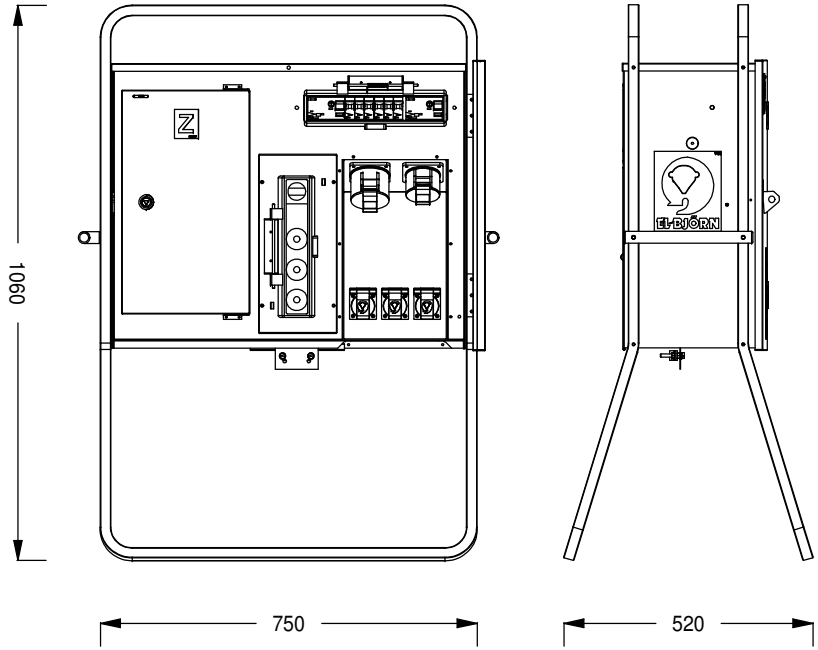

ARTIKELNR./ ARTICLE NO.
E2467184

MÄRKSTRÖM/ CURRENT RATING
25 A

MEASURING EQUIPMENT

CURR.-TRAFO-SPACE	ENERGY-METER-SPACE
	1

FAST ANSLUTNING/ FIXED CONNECTIONS

<125A	>125A

CEE-OUTLETS 3-POLE/230V

16A	32A	63A	125A

SCHUKO OUTLETS 2-POLE/230V

16A
3

CEE-OUTLETS 5-POLE/400V

16A	32A	63A	125A
1	1		

JFB/RCCB

<0,03A	>0,3A	>0,03A & <0,3A
2		

JFB/RCCB
Variable

VIKT/WEIGHT
30 kg

This drawing is property of El-Björn. May not be copied, shown or distributed without our written permission.

BYGGCENTRAL
ZSF 25//311-2 EN SE

EL-BJÖRN
www.elbjorn.com

RITAD AV/DRAWN BY	DATUM/DATE	NEXT SHEET	SHEET
CG	130816	2	1
SIGN	REVISION/ISSUE	RITNINGS NR./DRAWING	
	A*	E2467184	

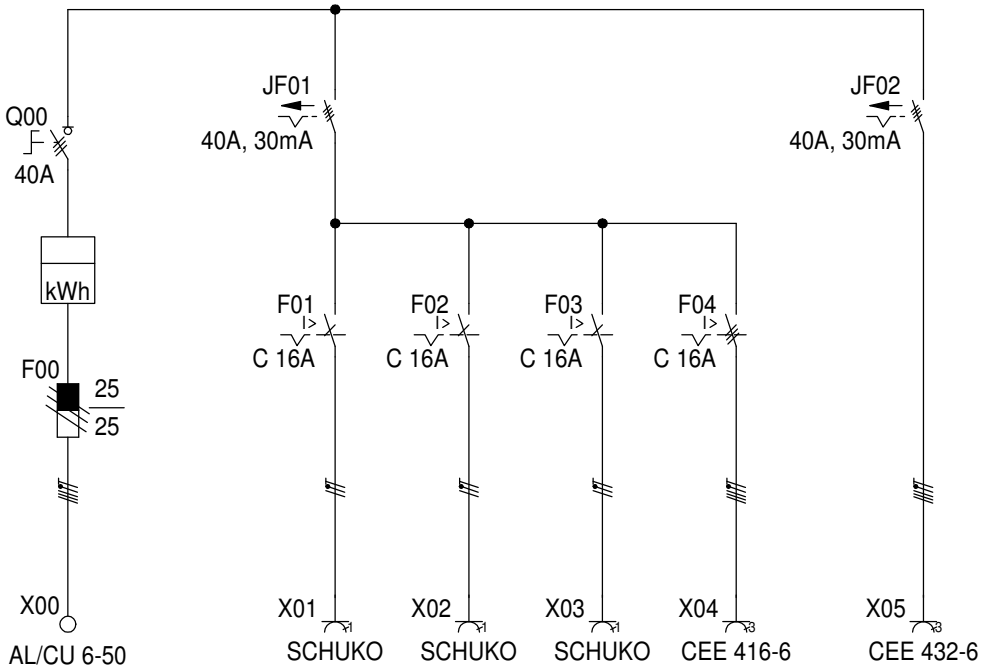

A	B	C	D	E	F	G	H	J	K

ARTIKELNR./ ARTICLE NO.
E2467184

MÄRKSTRÖM/ CURRENT RATING
25 A

MEASURING EQUIPMENT
CURR.-TRAFO-SPACE | ENERGY-METER-SPACE
1

FAST ANSLUTNING/ FIXED CONNECTIONS
<125A | >125A

CEE-OUTLETS 3-POLE/230V
16A | 32A | 63A | 125A

SCHUKO OUTLETS 2-POLE/230V
16A
3

CEE-OUTLETS 5-POLE/400V
16A | 32A | 63A | 125A
1 | 1

JFB/RCCB
<0,03A | >0,3A | >0,03A & <0,3A
2

JFB/RCCB
Variable

VIKT/WEIGHT
30 kg

This drawing is property of El-Björn. May not be copied, shown or distributed without our written permission.

BYGGCENTRAL
ZSF 25//311-2 EN SE

EL-BJÖRN
www.elbjorn.com

RITAD AV/DRAWN BY	DATUM/DATE	NEXT SHEET	SHEET
CG	130816	3	2
SIGN	REVISION/ISSUE	RITNINGS NR./DRAWING	
	A*	E2467184	

A	B	C	D	E	F	G	H	J	K

PC.	Position	Description	Type	Manufacturer	Data	Article No.	E-number(SE)
1		Kapsling	ZSF 25-63	El-Björn	750 x 1060 x 520	H90969	
3	F00	Säkringssockel	KV25.1	Ensto	25A	KV25.1	
3		Propphuv	K II	IFÖ	G II	K II	2001020
3		Smältpropp	D II	IFÖ	25A	D II	2011662
3		Passdel	PK 525	IFÖ	25A	PK 525	2000260
3	F01-F03	Dvärgbrytare	iC60N 1P 6kA	Schneider Electric	C 16A	A9F04116	2112043
1	F04	Dvärgbrytare	iC60N 3P 6kA	Schneider Electric	C 16A	A9F04316	2112073
2	JF01, JF02	Jordfelsbrytare	iID 4P A	Schneider Electric	40A, 30mA	A9Z21440	2164955
1	Q00	Lastbrytare	KS3.40	Ensto	40A, 3P	KS3.40	2154117
1	X00	Universalklämmor	KE61.3 Gul/Grön	Ensto	AL/CU 6-50mm²	KE61.3	2673533
1		Universalklämmor	KE61.2 Blå	Ensto	AL/CU 6-50mm²	KE61.2	2673532
3		Universalklämmor	KE61 Grå	Ensto	AL/CU 6-50mm²	KE61	2673531
3	X01-X03	Schukouttag	35219, Typ F, Fjäde	Mennekes	16A, 230V, IP54	11000EB	
1	X04	Paneluttag	416RU6	ABB	16A, 400V, IP44	416RU6	1961483
1	X05	Paneluttag	432RU6	ABB	32A, 400V, IP44	432RU6	1961633

ARTIKELNR./ ARTICLE NO.
E2467184

MÄRKSTRÖM/ CURRENT RATING
25 A

MEASURING EQUIPMENT
CURR.-TRAFO-SPACE | ENERGY-METER-SPACE
1

FAST ANSLUTNING/ FIXED CONNECTIONS
<125A | >125A

CEE-OUTLETS 3-POLE/230V
16A | 32A | 63A | 125A

SCHUKO OUTLETS 2-POLE/230V
16A
3

CEE-OUTLETS 5-POLE/400V
16A | 32A | 63A | 125A
1 | 1

JFB/RCCB
<0,03A | >0,3A | >0,03A & <0,3A
2

JFB/RCCB
Variable

VIKT/WEIGHT
30 kg

This drawing is property of El-Björn. May not be copied, shown or distributed without our written permission.

BYGGCENTRAL
ZSF 25//311-2 EN SE

EL-BJÖRN
www.elbjorn.com

RITAD AV/DRAWN BY	DATUM/DATE	NEXT SHEET	SHEET
CG	130816		3
SIGN	REVISION/ISSUE	RITNINGS NR./DRAWING	
	A*	E2467184	