THIS DRAWING IS A CONTROLLED DOCUMENT.

REVISIONS

P	LTR	DESCRIPTION	DATE	DWN	APVD
	A	First release	18JUN2021	SL	VR

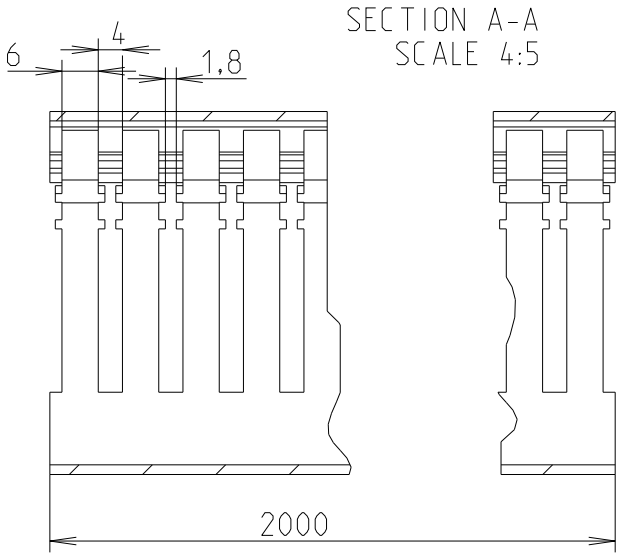

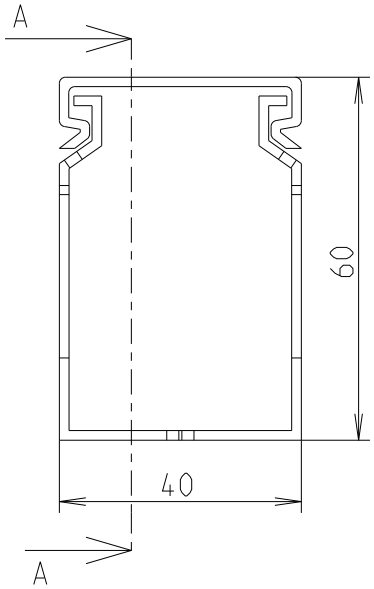

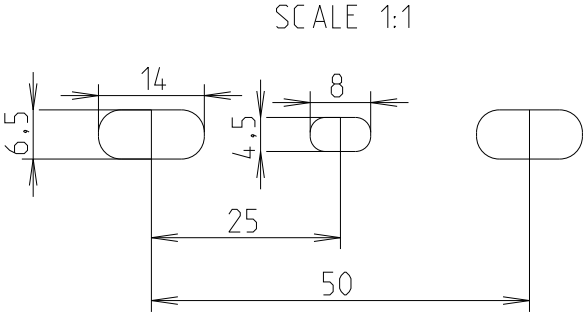

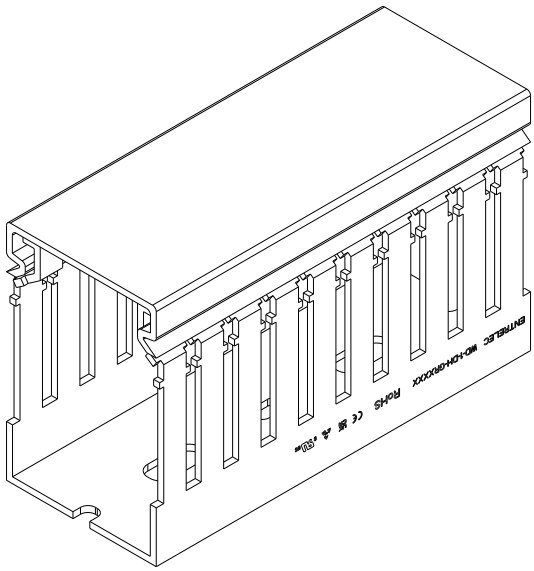

© 2021 TE Connectivity. All Rights Reserved.

1SET411105R0000

PART NO.

DIMENSIONS: mm	DWN 13-Sep-21 03:51:49 PM Deligny, Charlotte	MATERIAL PC-ABS	FINISH -
TOLERANCES UNLESS OTHERWISE SPECIFIED:	CHK 2021-06-18 Seguin, Laurene	TE Connectivity	
0 PLC ±	APVD 2021-07-05 Villard, Romain		
1 PLC ±1	PRODUCT SPEC -	NAME WD-1-DH-GR4060 -	
2 PLC ±1			
3 PLC ±1	APPLICATION SPEC -	SIZE A4 / CAGE CODE 00779 / DRAWING NO C-1SNP300191-0201	RESTRICTED TO -
4 PLC ±1			
ANGLES ±	WEIGHT -		
CUSTOMER DRAWING		SCALE 1:1	SHEET 1 OF 1 / REV A1

1469-35 (3/13)