A	B	C	D	E	F	G	H	J	K

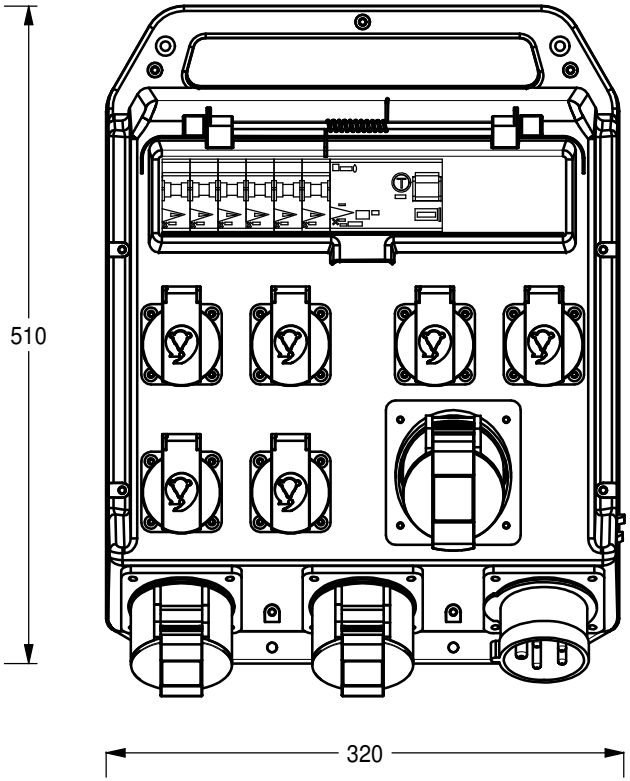

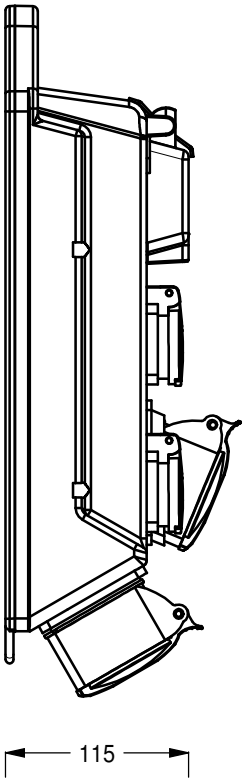

ARTIKELNR./
ARTICLE NO.
E2467118

MÄRKSTRÖM/
CURRENT RATING
16 A

MEASURING EQUIPMENT

CURR.-TRAFO-SPACE	ENERGY-METER-SPACE

FAST ANSLUTNING/
FIXED CONNECTIONS

<125A	>125A

CEE-OUTLETS
3-POLE/230V

16A	32A	63A	125A

SCHUKO OUTLETS
2-POLE/230V
16A
6

CEE-OUTLETS
5-POLE/400V

16A	32A	63A	125A
3			

JFB/RCCB

<0,03A	>0,3A	>0,03A & <0,3A
1		

JFB/RCCB
Variable

VIKT/WEIGHT
3,9 kg

This drawing is property of El-Björn. May not be copied, shown or distributed without our written permission.

UTTAGSCENTRAL
U 16Midi//63-1 EN

EL-BJÖRN
www.elbjorn.com

RITAD AV/DRAWN BY	DATUM/DATE	NEXT SHEET	SHEET
CG	130211	2	1
SIGN	REVISION/ISSUE	RITNINGS NR./DRAWING	
	A*	E2467118	

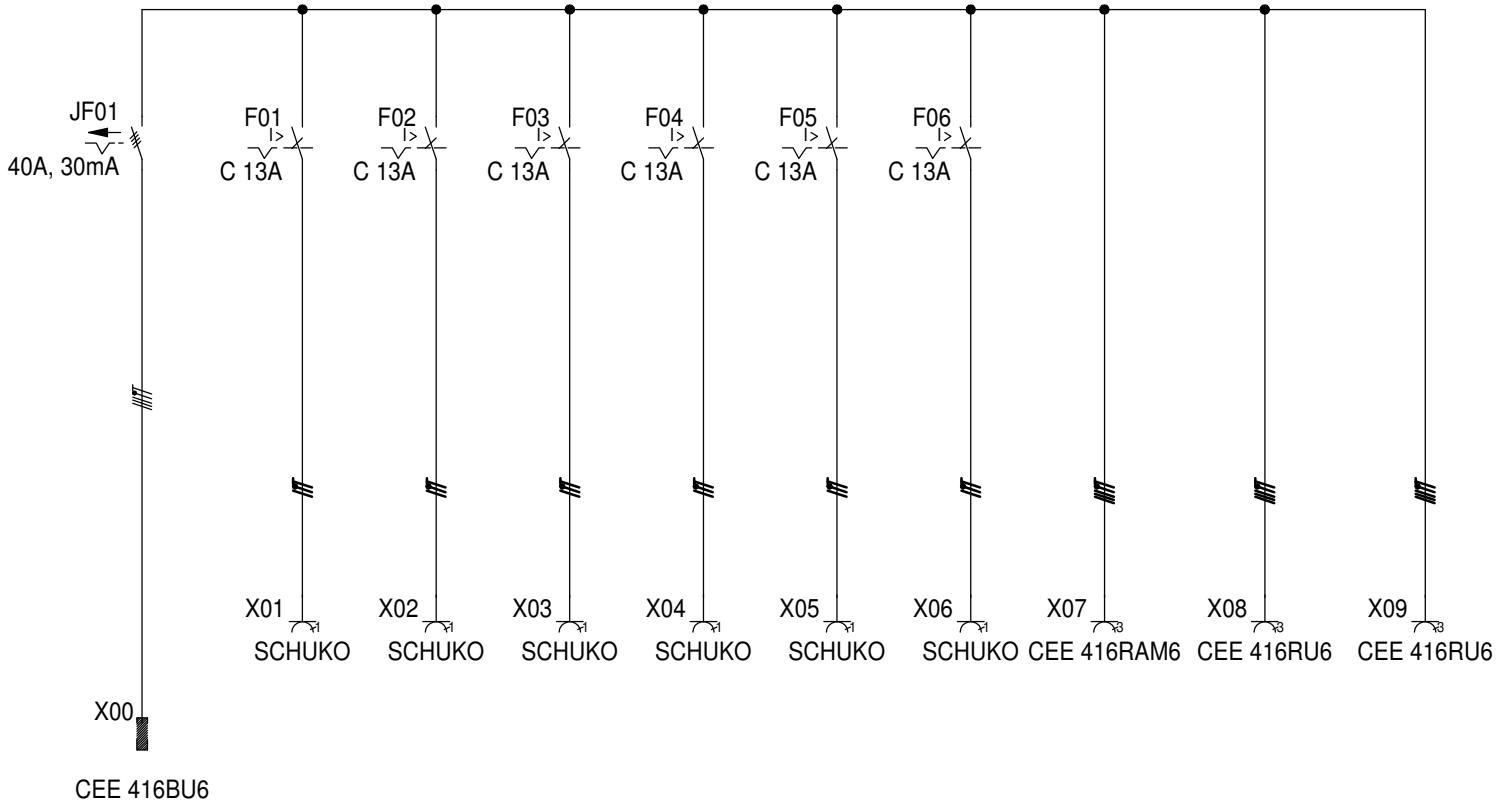

ARTIKELNR./ ARTICLE NO.	E2467118
MÄRKSTRÖM/ CURRENT RATING	16 A
MEASURING EQUIPMENT	CURR.-TRAFO-SPACE / ENERGY-METER-SPACE
FAST ANSLUTNING/ FIXED CONNECTIONS	<125A / >125A
CEE-OUTLETS 3-POLE/230V	16A / 32A / 63A / 125A
SCHUKO OUTLETS 2-POLE/230V	16A: 6
CEE-OUTLETS 5-POLE/400V	16A: 3 / 32A / 63A / 125A
JFB/RCCB	<0,03A: 1 / >0,3A / >0,03A & <0,3A
JFB/RCCB	Variable
VIKT/WEIGHT	3,9 kg

This drawing is property of El-Björn. May not be copied, shown or distributed without our written permission.

UTTAGSCENTRAL
U 16Midi//63-1 EN

EL-BJÖRN
www.elbjorn.com

RITAD AV/DRAWN BY: CG	DATUM/DATE: 130211	NEXT SHEET: 3	SHEET: 2
SIGN	REVISION/ISSUE: A*	RITNINGS NR./DRAWING: E2467118	

A	B	C	D	E	F	G	H	J	K

PC.	Position	Description	Type	Manufacturer	Data	Article No.	E-number(SE)
1		Elväska	MIDI (6)	El-Björn	320 x 450 x 130		
6	F01-F06	Automatsäkring	PLS6, 6kA, 1P	Eaton	C 13A	242679	2141468
1	JF01	Jordfelsbrytare	PFIM, 4-P	Eaton	40A, 30mA	235439	2162237
1	X00	Panelintag	416BU6	ABB	16A, 400V, IP44	416BU6	1963883
6	X01-X06	Schukouttag	35218, Typ F, Skruv	Mennekes	16A, 230V, IP54	11020EB	
1	X07	Paneluttag	416RAM6	ABB	16A, 400V, IP44	416RAM6	1960963
2	X08, X09	Paneluttag	416RU6	ABB	16A, 400V, IP44	416RU6	1961483

ARTIKELNR./ ARTICLE NO.
E2467118

MÄRKSTRÖM/ CURRENT RATING
16 A

MEASURING EQUIPMENT
CURR.-TRAFO-SPACE | ENERGY-METER-SPACE

FAST ANSLUTNING/ FIXED CONNECTIONS
<125A | >125A

CEE-OUTLETS 3-POLE/230V
16A | 32A | 63A | 125A

SCHUKO OUTLETS 2-POLE/230V
16A
6

CEE-OUTLETS 5-POLE/400V
16A | 32A | 63A | 125A
3

JFB/RCCB
<0,03A | >0,3A | >0,03A & <0,3A
1

JFB/RCCB
Variable

VIKT/WEIGHT
3,9 kg

This drawing is property of El-Björn. May not be copied, shown or distributed without our written permission.

UTTAGSCENTRAL
U 16Midi//63-1 EN

EL-BJÖRN
www.elbjorn.com

RITAD AV/DRAWN BY	DATUM/DATE	NEXT SHEET	SHEET
CG	130211		3
SIGN	REVISION/ISSUE	RITNINGS NR./DRAWING	
	A*	E2467118	