ID	Description	Date	By	Appr.
A				

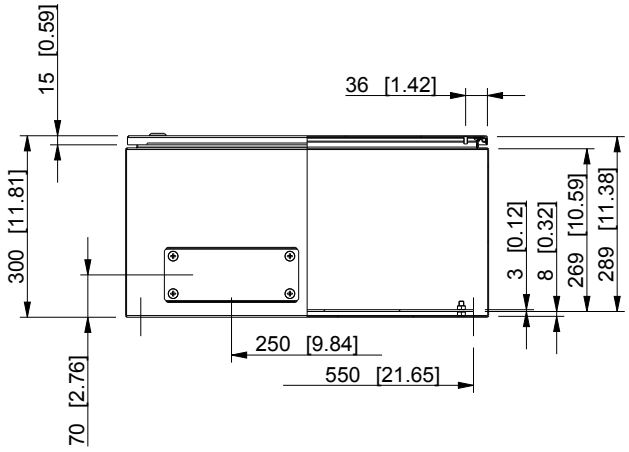

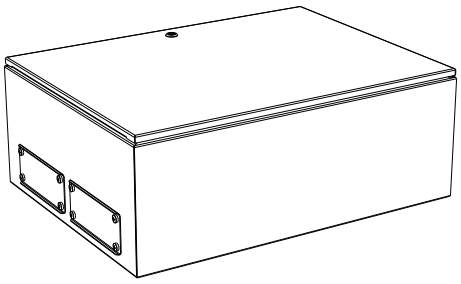

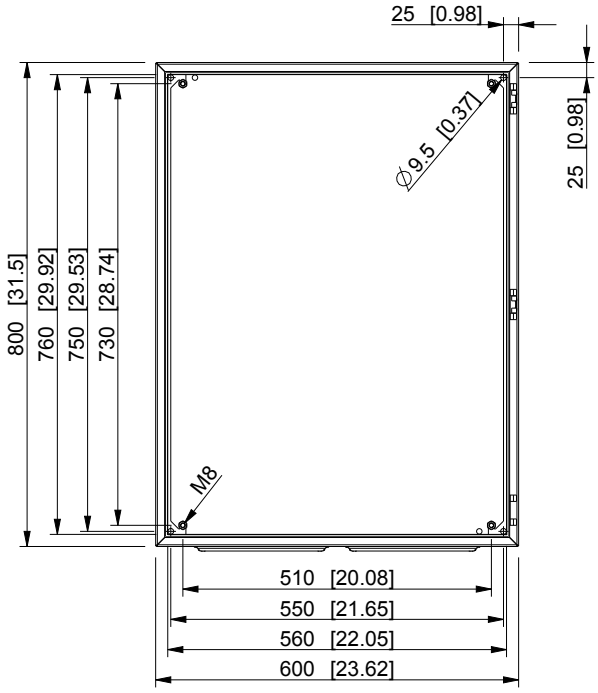

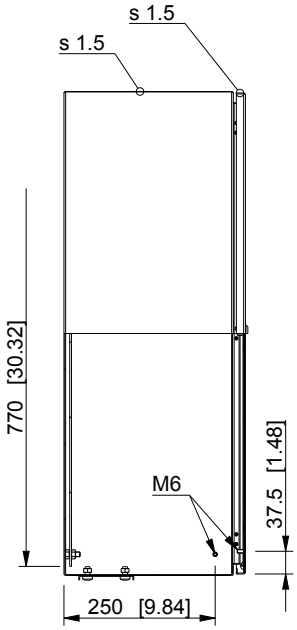

Flange opening, type 2 (C/FL21)

Dimensions in mm [inches]

Material: Mild steel, polyester painted		Color: RAL 7035	
Supplier: -	Tool No: -	Weight [kg]: 32.53	Volume: -

CASEMET

Casemet Oy

Scale	Date	07.07.16
1:12	By	PLe
-	Checked	
-	Ctrl	

EFEF608030A

Replaces:	
Replaced:	
Drw No:	A
Ref:	Cubo E
Code:	EFEF608030A
Sheet No:	

model EFEF608030A PART

drawing EFEF_2 DRAWING