ID	Description	Date	By	Appr.
A				

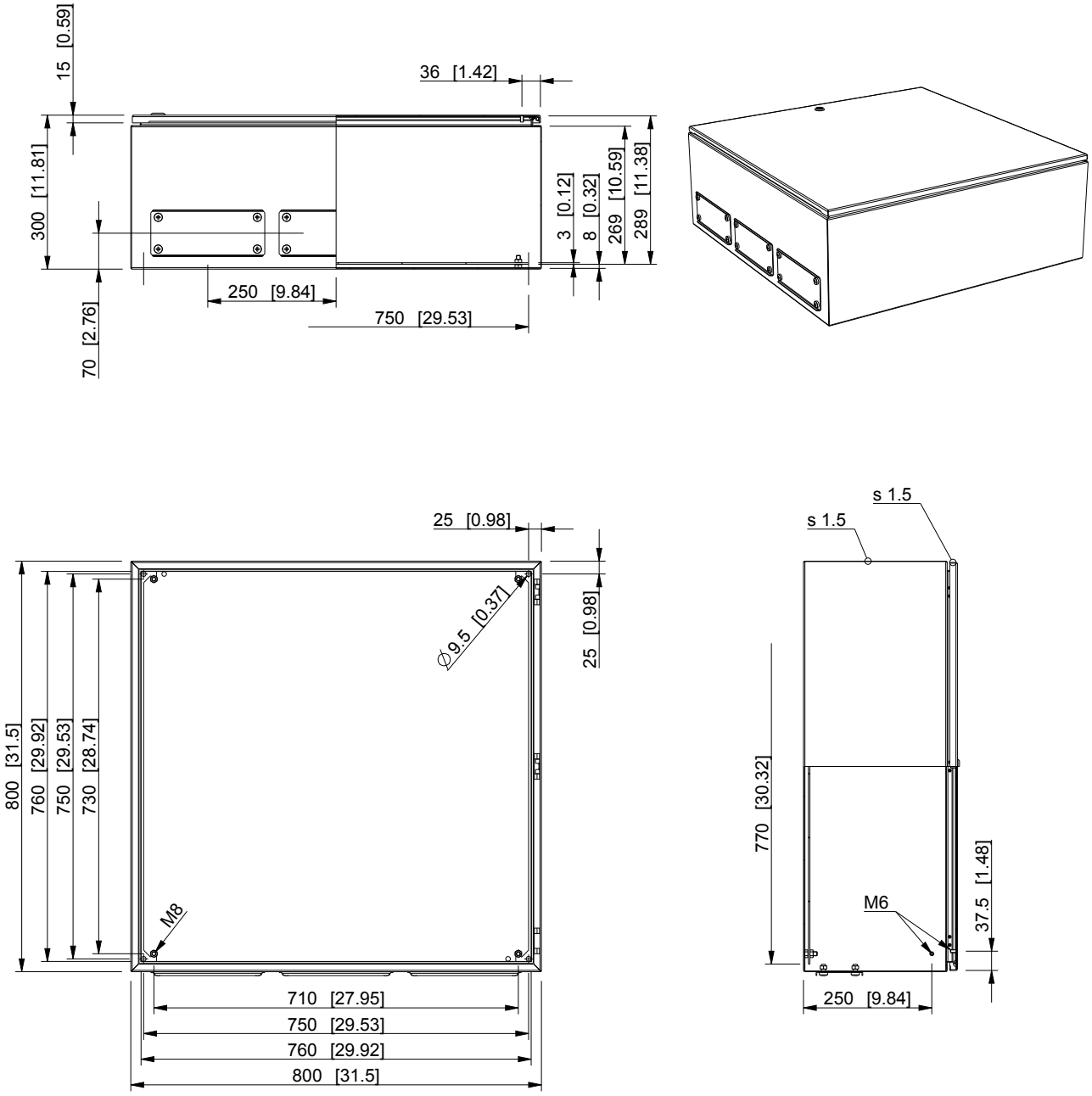

Flange opening, type 2 (C/FL21)

Dimensions in mm [inches]

Material: Mild steel, polyester painted		Color: RAL 7035	
Supplier: -	Tool No: -	Weight [kg]: 41.68	Volume: -

CASEMET Casemet Oy		EFEF808030A	Replaces:
			Replaced:
Scale	Date	07.07.16	Drw No: A
1:12	By	PLe	Ref: Cubo E
-	Checked		Code: EFEF808030A
-	Ctrl		Sheet No:

model EFEF808030A PART

drawing EFEF_3 DRAWING