ID	Description	Date	By	Appr.
A				

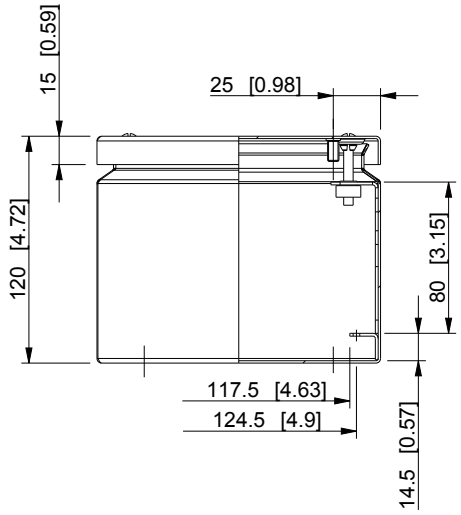

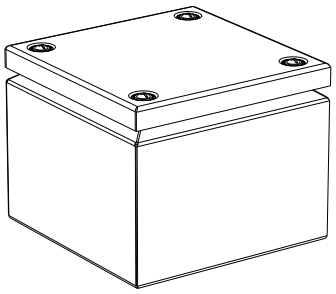

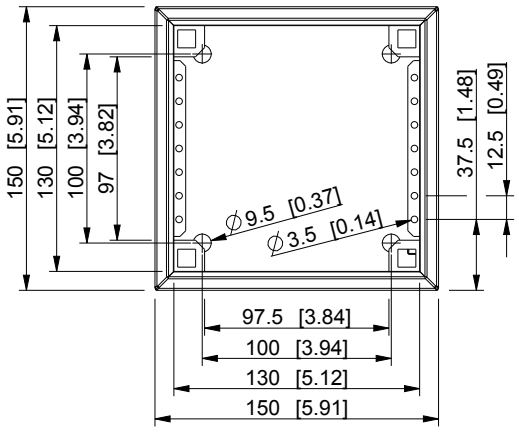

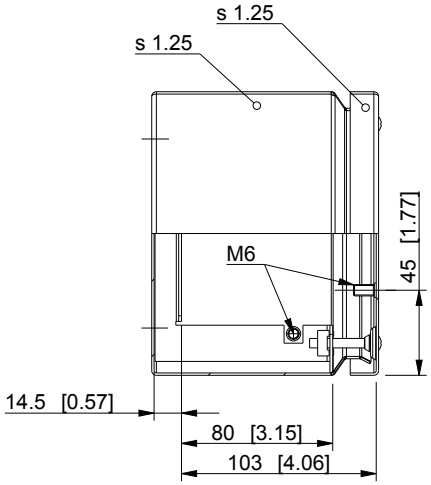

Dimensions in mm [inches]

Material: Mild steel, polyester painted		Color: RAL 7035	
Supplier:	Tool No:	Weight [kg]: 1.42	Volume: -

CASEMET
Casemet Oy

Scale	Date	26.07.16
1:4	By	PLe
-	Checked	
-	Ctrl	

FFUP151512A

Replaces:	
Replaced:	
Drw No:	A
Ref:	Cubo F
Code:	FFUP151512A
Sheet No:	

model FFUP151512A PART
drawing FFUP DRAWING