ID	Description	Date	By	Appr.
A				

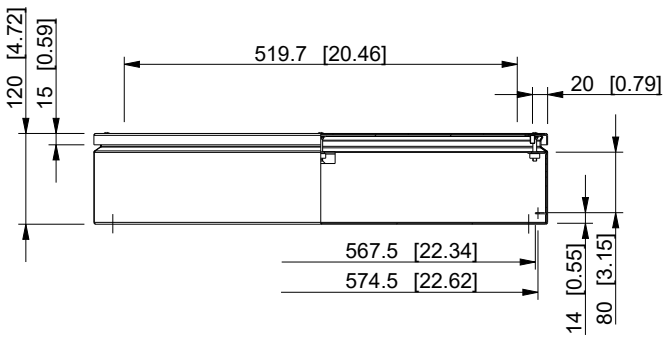

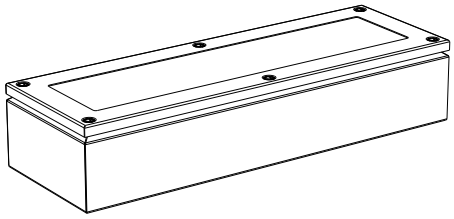

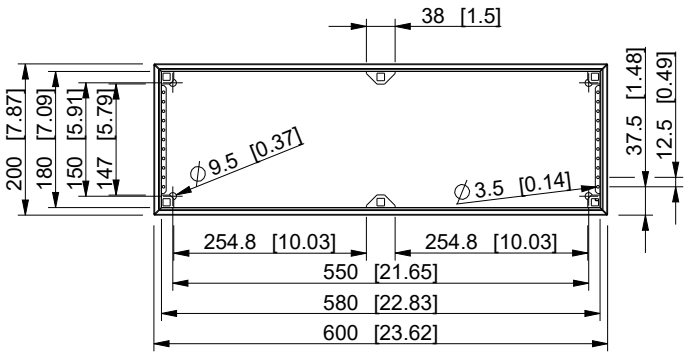

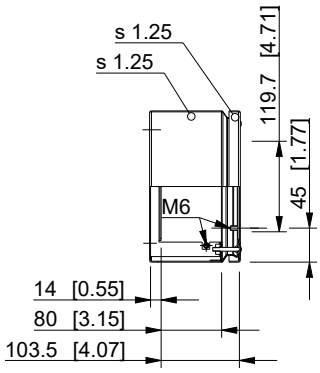

Dimensions in mm [inches]

Material: Mild steel, polyester painted		Color: RAL 7035	
Supplier:	Tool No:	Weight [kg]: 5.30	Volume: 0
CASEMET Casemet Oy		FFUW602012A	Replaces:
			Replaced:
Scale	Date	08.08.16	Drw No: A
1:10	By	PLe	Ref: Cubo F
-	Checked		Code: FFUW602012A
-	Ctrl		Sheet No:

model FFUW602012A PART

drawing FFUW_1 DRAWING