ID	Description	Date	By	Appr.
A				

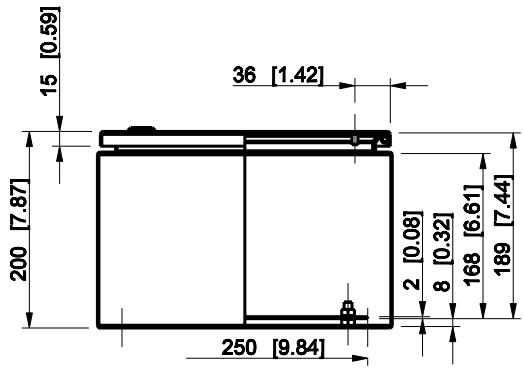

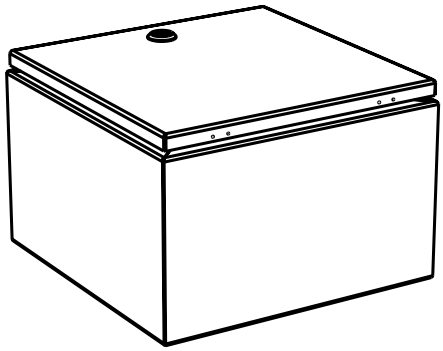

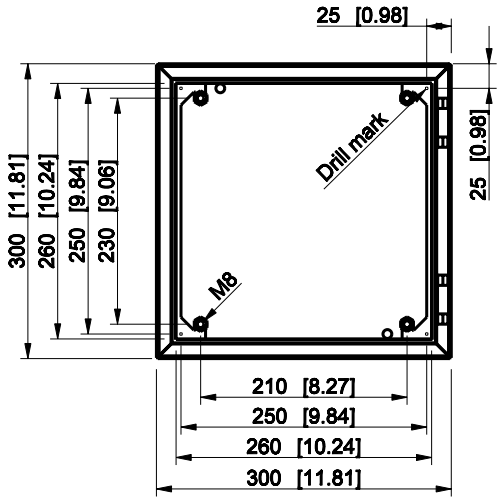

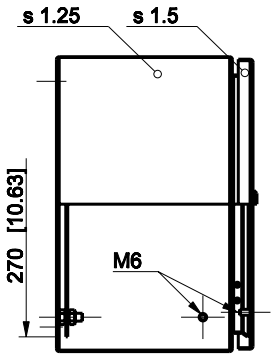

Dimensions in mm [inches]

Material: Steinless steel, AISI 304		Color:	
Supplier:	Tool No:	Weight [kg]: 6.55	Volume:
ENSTO CONTROL OY		ESSP303020	Replaces:
			Replaced:
Scale	Date	02.12.08	Drw No: A
2:15	By	VLe	Ref: Cubo E
-	Checked		Code: ESSP303020
-	Ctrl		Sheet No:

model ESSP303020.PART

drawing ESSP.DRAWING