ID	Description	Date	By	Appr.
A				

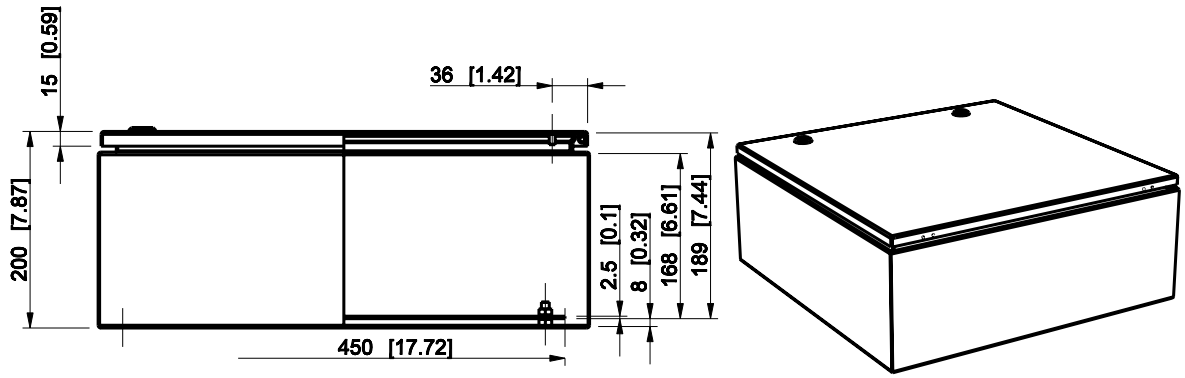

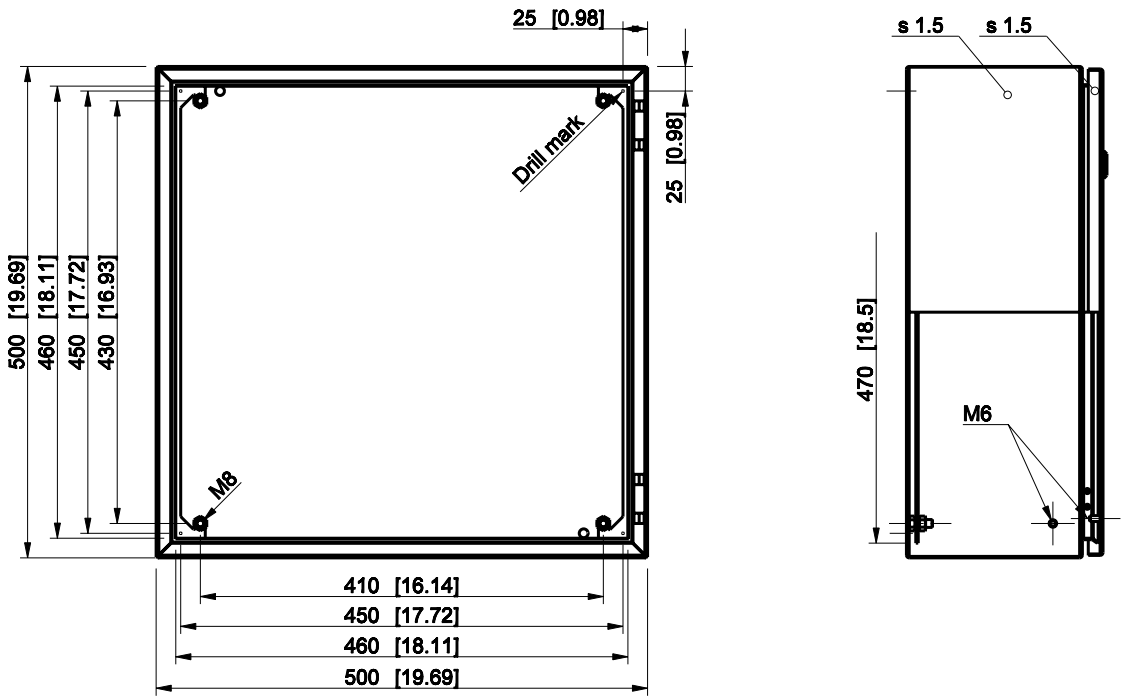

Dimensions in mm [inches]

Material: Steinless steel, AISI 304		Color:	
Supplier:	Tool No:	Weight [kg]: 15.47	Volume:
ENSTO CONTROL OY		ESSP505020	Replaces:
			Replaced:
Scale	Date	02.12.08	Drw No: A
2:15	By	VLe	Ref: Cubo E
-	Checked		Code: ESSP505020
-	Ctrl		Sheet No:

model ESSP505020 PART

drawing ESSP_1 DRAWING