Gave	TECHNICAL DATASHEET	Date	19-05-16
		Revision	v.1
Gave Electro SL	REF: AB55341F4	Aproved by	
			B.Perez

Description	Switch 4 Phases size.1
Current	40 A

Electrical Properties according EN 60947-3

Thermic air Current		Ith A	40
Fuse protection máx. gG-aM		In A	40
Wire dimension		AWG	6
Rigid cable		mm^2	6-25
Flexible cable		mm^2	6-16
Torque		Nm	2
Connection screws			Pz2-M5
Terminal class			Cage
Impulse withstand voltage		Uimp kV	4
Short-circuit condicional capacity		Icc kA	6
Operational Voltage		Ue V	690
Insulation Voltage		Vac	690
Insulation Voltage		Vdc	600
Operational Current		Ie A	40
AC21-Resistive Loads	3x230V	kW	15
	3x400V	kW	22
	3x500V	kW	30
AC22-Mixed Loads	3x230V	kW	11
	3x400V	kW	22
	3x500V	kW	22
AC23-Motor Loads	3x230V	kW	7.5
	3x400V	kW	18.5
	3x500V	kW	22

Dimensions

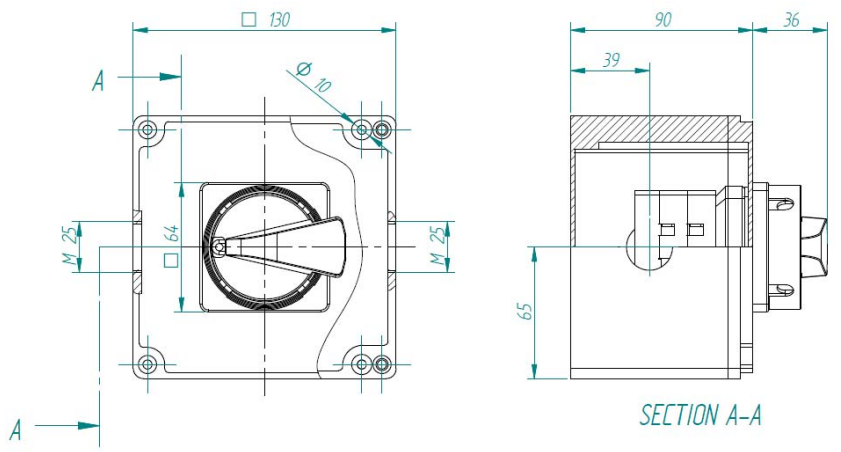

Fixing drills

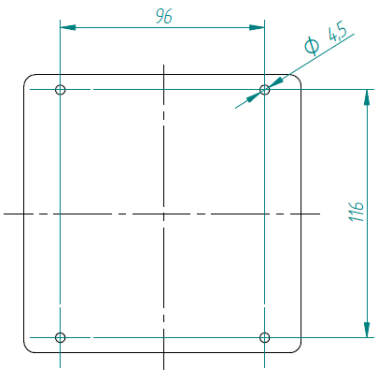

Electric properties according UL 508 – Manual Motor Controller

1 phase 110-120Vac	hp	2
1 phase 220-240Vac	hp	5
3 phases 220-240Vac	hp	7,5
3 phases 380-415Vac	hp	10
3 phases 440-480Vac	hp	15
3 phases 550-600Vac	hp	20

Electric Scheme-diagram

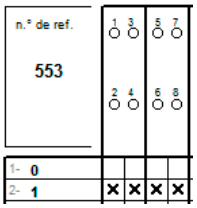

Switch 4 poles 2 Positions

Manufactured and Certifications

Manufactures and test according to European and American Standards:

EN 60947-1: 2008
EN 60947-3: 2009
UL 508
EN 12101-3: 2002 (category F400)

Certifications:

CE

Other Properties and Observations

Aluminium Enclosure IP65
Color RAL 7040