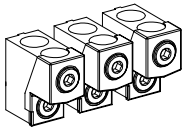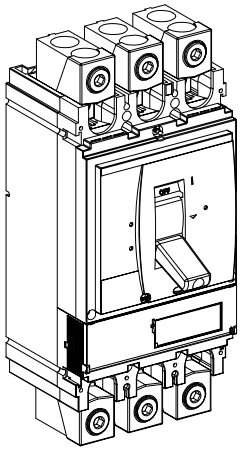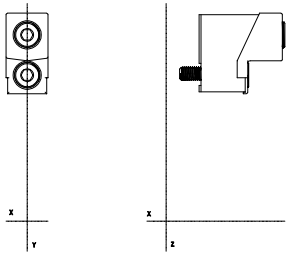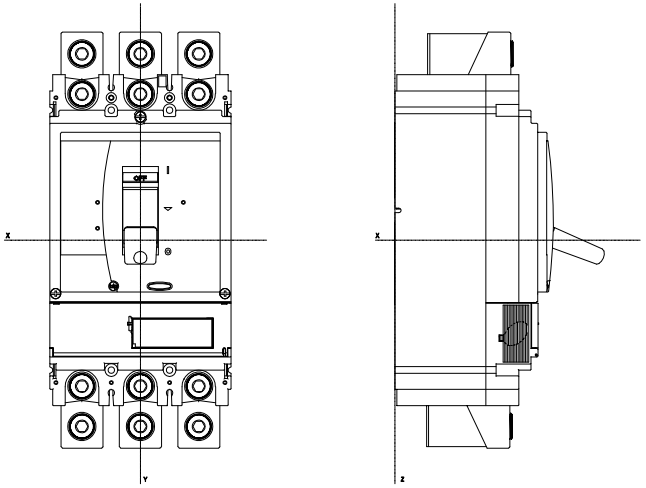SB100108_CAD2D_Mechanical_Dimension