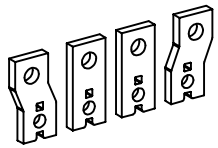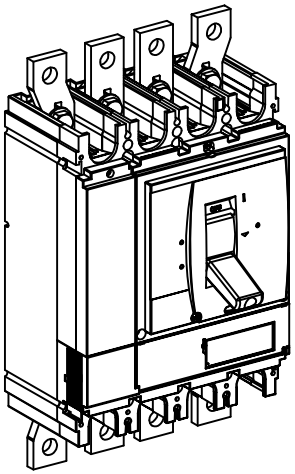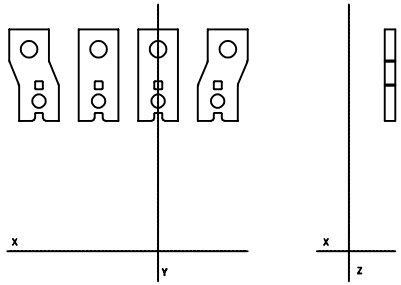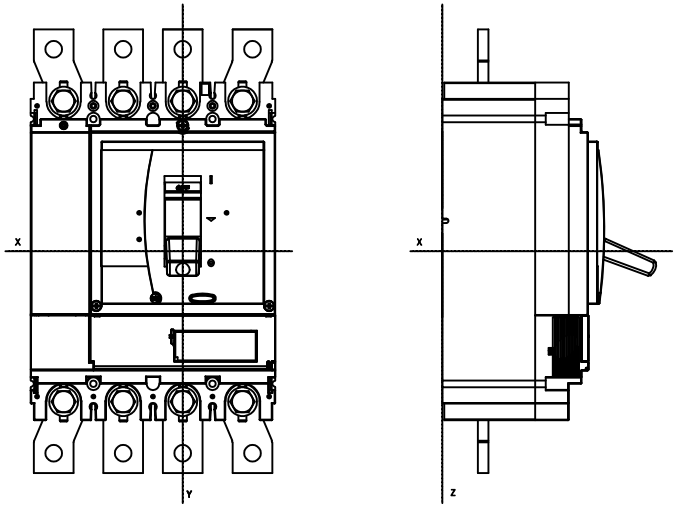SB100118_CAD2D_Mechanical_Dimension