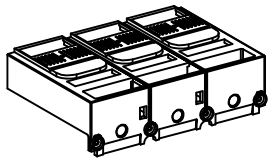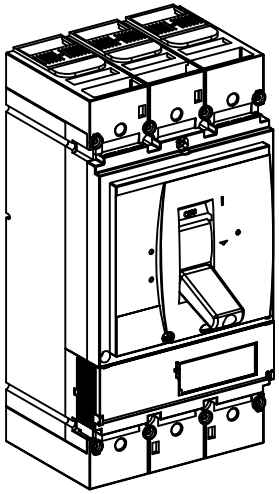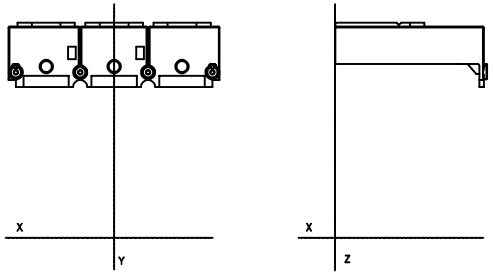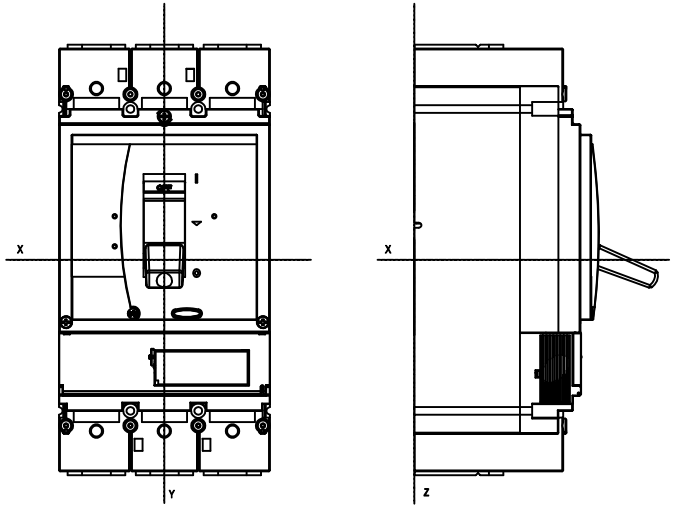SB100124_CAD2D_Mechanical_Dimension