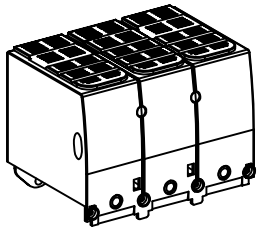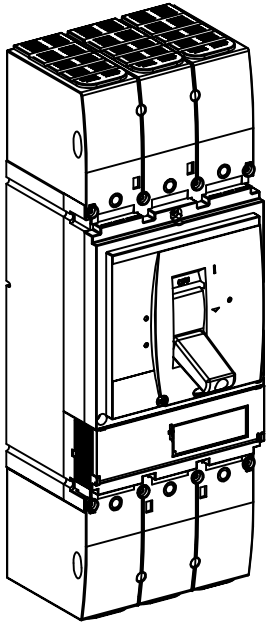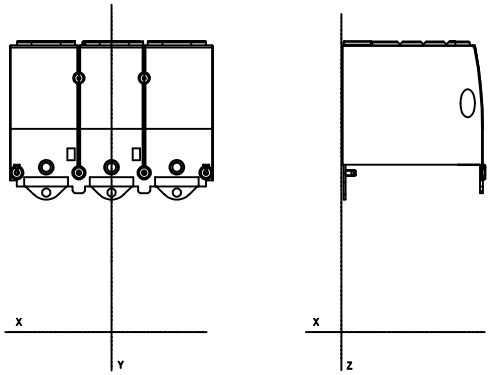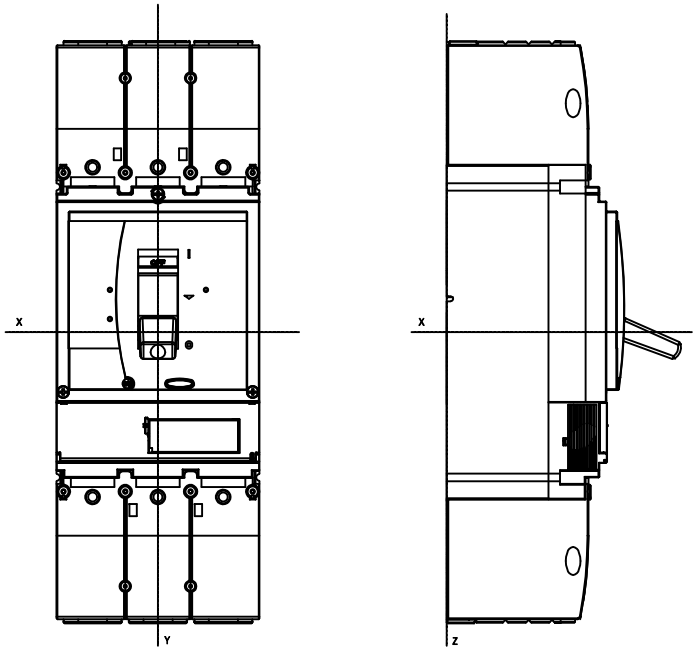SB100126_CAD2D_Mechanical_Dimension