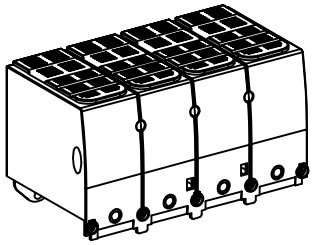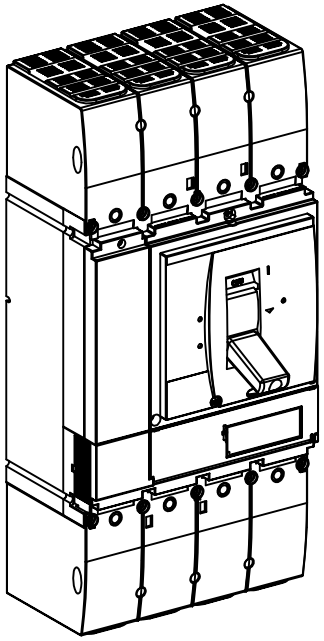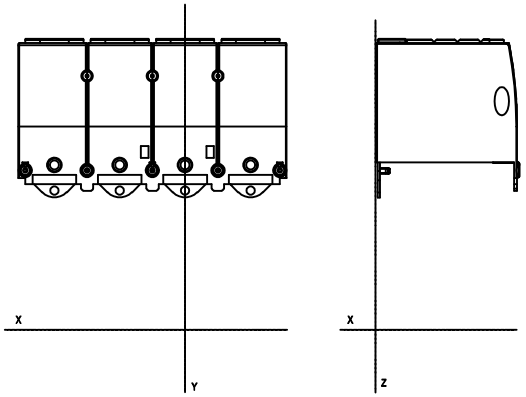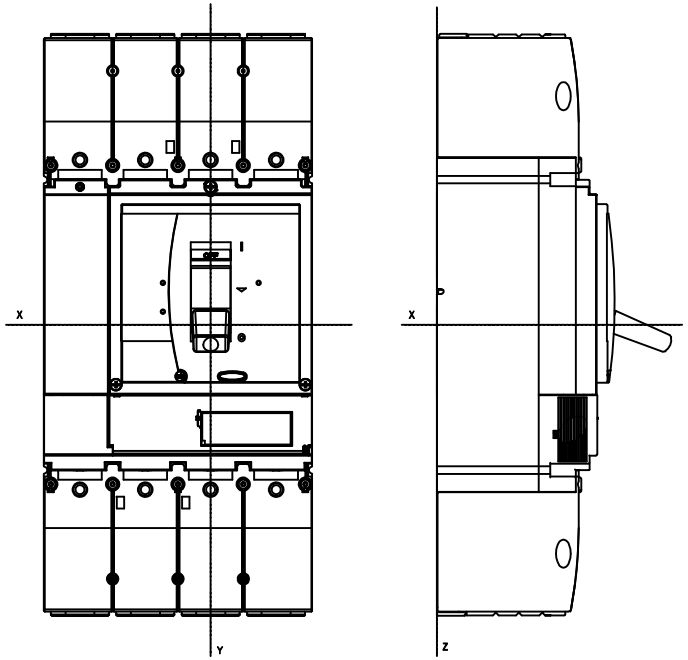SB100127_CAD2D_Mechanical_Dimension