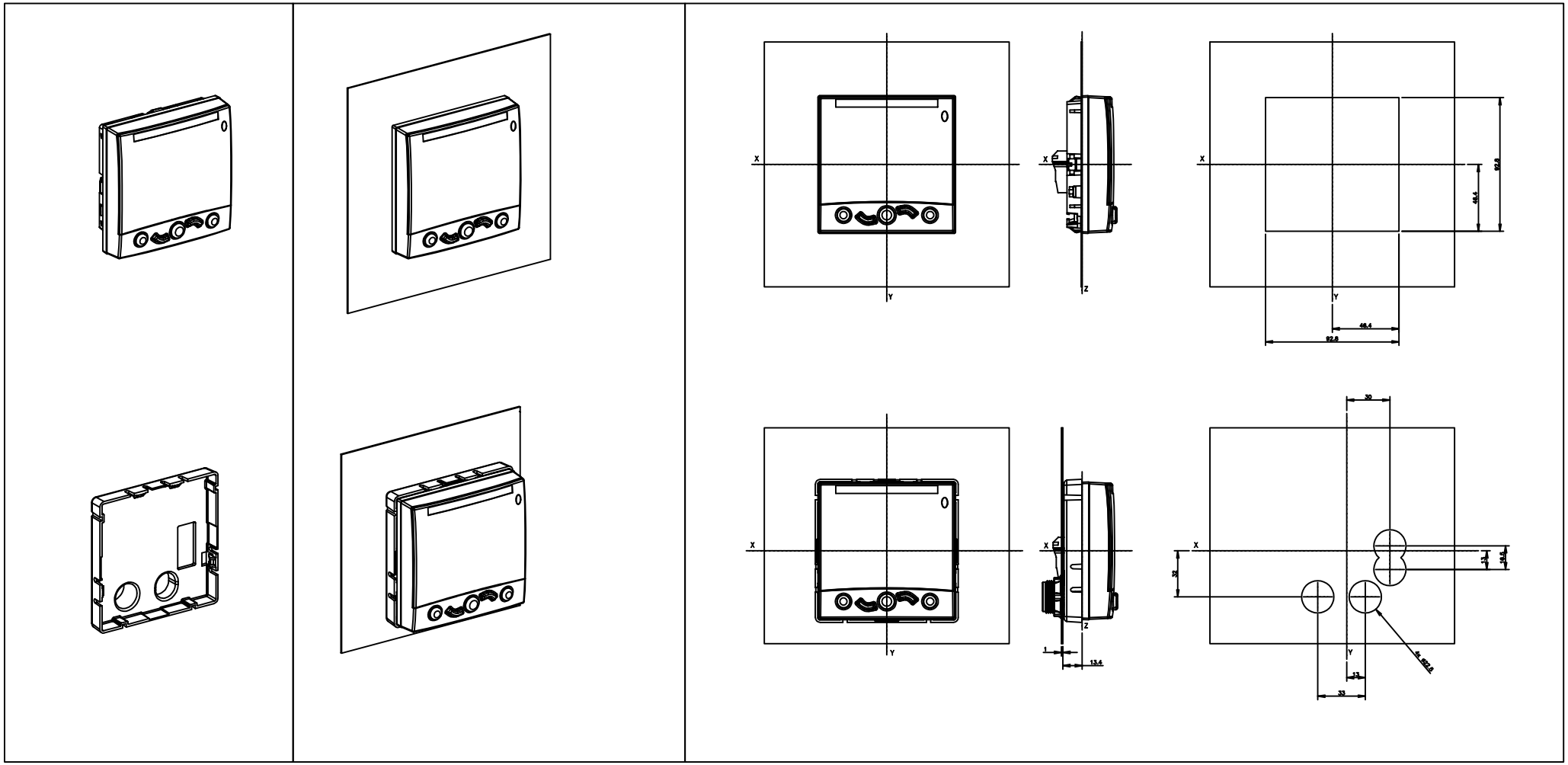SB100055_CAD2D_Mechanical_Mounting