SIEMENS

SIRIUS

Monitoring and control devices

3RN2 Thermistor motor protection relay

Manual

Edition 10/2016

siemens.com

SIEMENS

SIRIUS

Monitoring and control devices SIRIUS 3RN2 thermistor motor protection relay

Manual

Introduction 1

Safety notes 2

ATEX 3

Description 4

Mounting 5

Connection 6

Functions 7

Alarm, error and system messages 8

Technical data 9

CAx data 10

Dimension drawings 11

Circuit diagrams 12

Spare parts/accessories 13

10/2016

A5E34244868002A/RS-AA/001

Legal information

Warning notice system

This manual contains notices you have to observe in order to ensure your personal safety, as well as to prevent damage to property. The notices referring to your personal safety are highlighted in the manual by a safety alert symbol, notices referring only to property damage have no safety alert symbol. These notices shown below are graded according to the degree of danger.

⚠ DANGER

indicates that death or severe personal injury **will** result if proper precautions are not taken.

⚠ WARNING

indicates that death or severe personal injury **may** result if proper precautions are not taken.

⚠ CAUTION

indicates that minor personal injury can result if proper precautions are not taken.

NOTICE

indicates that property damage can result if proper precautions are not taken.

If more than one degree of danger is present, the warning notice representing the highest degree of danger will be used. A notice warning of injury to persons with a safety alert symbol may also include a warning relating to property damage.

Qualified Personnel

The product/system described in this documentation may be operated only by **personnel qualified** for the specific task in accordance with the relevant documentation, in particular its warning notices and safety instructions. Qualified personnel are those who, based on their training and experience, are capable of identifying risks and avoiding potential hazards when working with these products/systems.

Proper use of Siemens products

Note the following:

⚠ WARNING

Siemens products may only be used for the applications described in the catalog and in the relevant technical documentation. If products and components from other manufacturers are used, these must be recommended or approved by Siemens. Proper transport, storage, installation, assembly, commissioning, operation and maintenance are required to ensure that the products operate safely and without any problems. The permissible ambient conditions must be complied with. The information in the relevant documentation must be observed.

Trademarks

All names identified by ® are registered trademarks of Siemens AG. The remaining trademarks in this publication may be trademarks whose use by third parties for their own purposes could violate the rights of the owner.

Disclaimer of Liability

We have reviewed the contents of this publication to ensure consistency with the hardware and software described. Since variance cannot be precluded entirely, we cannot guarantee full consistency. However, the information in this publication is reviewed regularly and any necessary corrections are included in subsequent editions.

Siemens AG
Division Digital Factory
Postfach 48 48
90026 NÜRNBERG
GERMANY

3ZX1012-0RN20-1AC1
℗ 10/2016 Subject to change

Copyright © Siemens AG 2016.
All rights reserved

Table of contents

1 Introduction 7
1.1 Required basic knowledge 7
1.2 Service&Support 7
1.3 DataMatrix code 10
1.4 Standards/Regulations/Approvals 11
1.5 Declaration of conformity 11
1.6 Article No. scheme 12
2 Safety notes 13
2.1 General safety notes 13
2.2 Intended use 14
2.3 Current information about operational safety 14
3 ATEX 15
3.1 Safety and commissioning instructions for hazardous areas 15
3.2 Use in areas subject to an explosion hazard due to gases or dust 19
4 Description 21
4.1 Device overview 21
4.2 Device description 21
4.3 Device versions 25
4.4 Special features 25
4.5 Area of application 26
5 Mounting 27
5.1 Warning notices 27
5.2 Terminal coding 28
5.3 Mounting the devices on a standard mounting rail 29
5.4 Disassembling devices from a standard mounting rail 30
5.5 Mounting the devices on a wall 31
5.6 Removing the devices from the wall 32

6 Connection 33
6.1 Terminal assignment 33
6.2 Connection data for terminals 38
6.3 Connecting the screw-type terminals 39
6.4 Disconnecting the screw-type terminals 40
6.5 Wiring rules for spring-loaded terminals (with push-in technology) 41
6.6 Connect the spring-loaded terminal (push-in) 42
6.7 Disconnect the spring-loaded terminal (push-in) 44
6.8 Attaching the terminals 45
6.9 Removing the terminals 46
7 Functions 47
8 Alarm, error and system messages 51
8.1 Function charts 51
8.2 LED displays 54
9 Technical data 57
9.1 Technical data in Siemens Industry Online Support 57
10 CAx data 59
11 Dimension drawings 61
12 Circuit diagrams 65
13 Spare parts/accessories 67
Index 69

Introduction 1

1.1 Required basic knowledge

Basic knowledge of low-voltage industrial controls is required to understand this manual.

⚠ WARNING
Qualified personnel required All work involved in connecting, commissioning, and maintenance must be performed by **qualified, responsible** personnel. Improper handling may result in serious **personal injury and considerable damage to property**.

1.2 Service&Support

Online Support

The Online Support in the Service&Support portal is an extensive information system for all questions relating to Siemens products and solutions. This service enables direct and central access to in-depth information concerning the products, systems and applications for industry and to a large number of programming, configuration, and application examples. Its content is available via a mobile app.

The Technical Forum of the Online Support provides the opportunity for users to swap information. Support Request allows contact to be established with Siemens experts in Technical Support.

Siemens Industry Online Support ensures that users in industry are always kept up-to-date with news, software updates and announcements by means of newsletters and Twitter.

Links: Service&Support Portal (http://support.automation.siemens.com), Online Support (http://support.automation.siemens.com/WW/view/en/16605022)

Product Support

Are you looking for product information such as technical data, updates or FAQs? The "Product Support" section of the Service&Support portal offers an extensive collection of all information about the Siemens Industry Automation and Drive Technologies products and solutions:

- Answers to frequently asked questions (FAQs)
- Updates/upgrades, service packs, and support tools for downloading
- Manuals and operating instructions
- Technical specifications/CAx data
- Approvals and certificates
- Test certificates and characteristic curves

All Product Support information is at your disposal free of charge and around the clock, and you always get the current version.

Link: Product Support (http://support.automation.siemens.com/WW/view/en/4000024)

CAx data

The CAx Download Manager provides you with a simple means of gaining access to up-to-date product data for your CAx or CAe system.

You configure your own download package with just a few clicks. You can choose from the following information for products:

- Product images
- 2D dimensional drawings
- 3D models
- Internal circuit diagrams
- EPLAN macro files
- Manuals
- Characteristics
- Operating instructions
- Certificates
- Product master data

Link: CAx Download Manager (http://support.automation.siemens.com/WW/view/en/42455541)

Applications & Tools

Applications & Tools supports you with various tools and examples when it comes to solving your automation tasks. Solutions are presented as the interaction between several components in the system, without focusing on individual products:

- Application examples
- Function blocks & tools
- Background and system descriptions
- Performance statements
- Demonstration systems/videos

Link: Applications & Tools (https://support.industry.siemens.com/cs/ww/en/sc/2054)

My Documentation Manager

The My Documentation Manager enables you to put together your own documentation from our standard documents (manuals), which are located in the product support Under mySupport, you have the opportunity to create and manage you own compilations in a structure of their own.

Link: My Documentation Manager (http://support.automation.siemens.com/WW/view/en/38715968)

1.3 DataMatrix code

A DataMatrix code is lasered onto the lower terminal cover of all devices of this series.

DataMatrix codes are standardized in ISO/IEC 16022. The DataMatrix codes on Siemens devices use ECC200 coding.

The following device information is encoded in the DataMatrix codes as a bit stream:

- Article number
- Serial number

This information is stored in the following format in the DataMatrix code:

1P	Article number	+	S	Serial number
Data identifier	Net content	Separator	Data identifier	Net content

Note

The information content is displayed without spaces.

This machine-readable information simplifies and accelerates handling of the respective devices.
As well as fast access to the serial numbers of the respective devices for unique identification, the DataMatrix codes simplify communication with Siemens Technical Support.

SIEMENS Industry Support App

DataMatrix codes primarily enable extremely fast and convenient access to all device-specific information relating to an article number in the SIEMENS Service&Support Portal (http://support.automation.siemens.com), such as operating instructions, manuals, data sheets, FAQs, etc.
We provide the SIEMENS Industry Support app free of charge for this purpose and it can be used on most commercially available smart phones and tablets.
The SIEMENS Industry Support app is available for iOS and Android-based devices and can be accessed via the following links:

Link for Android

Link for iOS

Link for Windows Phone

1.4 Standards/Regulations/Approvals

Standards

The SIRIUS 3RN2 thermistor motor protection relays comply with the following standards:

- EN 60947-8 "Low-voltage switchgear and controlgear - Control units for built-in thermal protection (PTC) for rotating electrical machines"
- EN 50495 "Safety devices required for the safe functioning of equipment with respect to explosion risks"

UL/CSA/Shipbuilding approval

SIRIUS components have been approved by a whole range of bodies for various sectors (e.g. shipbuilding).

You will find the the current list of approvals in the Monitoring and Control Devices chapter of Catalog IC 10 - "SIRIUS Industrial Controls" (www.siemens.com/industrial-controls/catalogs).

Further information and certificates are available for download on the Internet (https://support.industry.siemens.com/cs/ww/en/ps).

1.5 Declaration of conformity

The manufacturer declares that the thermistor motor protection relays of the SIRIUS 3RN2 series in the designs marketed by us comply with the applicable basic safety and health requirements of the EC Directives* stated (including amendments) and that the stated standards* were applied in their design and construction.

* You can download the complete EC Declaration of Conformity from the Service Portal (https://support.industry.siemens.com/cs/ww/en/ps/16027/cert) in PDF format.

1.6 Article No. scheme

Note

The Article No. scheme is for illustrative purposes only and for better understanding of the logic behind the article numbers.

For your orders, please use the article numbers quoted in the catalog in the Selection and ordering data.

Table 1- 1 Article No. scheme

Digit of the Article No.	**1 - 3**	**4**	**5**	**6**	**7**		**8**	**9**	**10**	**11**	**12**			
SIRIUS thermistor motor protection relay	**3 R N**	**□**	**□**	**□**	**□**	**-**	**□**	**□**	**□**	**□**	**0**			
Generation		□				-							2	Generation
Sensor type			□			-							0	Type A PTC
Number/type of sensor circuits				□		-							0	1 sensor circuit, supply voltage = relay output voltage
													1	1 sensor circuit
													2	2 sensor circuits for warning and tripping
Resetting and further functions					□	-							0	Automatic reset
													1	Manual reset, with wire-break and short-circuit detection
													2	Manual/auto/remote reset, non-volatile, with wire-break and short-circuit detection
													3	Manual/auto/remote reset, non-volatile, with wire-break and short-circuit detection, with protective separation
Connection system						-	□						1	Screw terminal
													2	Spring-loaded terminal (push-in)
Output relay						-		□					A	1 CO contact
													B	2 CO contacts
													C	1 NO contact + 1 NC contact
													D	1 NO contact + 1 CO contact
													G	2 CO contacts, hard gold-plated
Supply voltage						-			□				A	24 V
													W	24 … 240 V
Waveform of the supply voltage						-				□			3	50/60 Hz AC/DC
													4	DC
Relay response to power failure											□		0	Monostable
													1	Bistable
													8	Special versions
Example	**3 R N**	**2**	**0**	**0**	**0**	**-**	**1**	**A**	**A**	**3**	**0**			SIRIUS thermistor motor protection relay, 2nd generation, type A PTC, 1 sensor circuit, automatic reset, screw-type terminals, 1 CO, 24 V, 50/60 Hz AC/DC, monostable

Safety notes 2

2.1 General safety notes

Note

Recycling and disposal

Dispose of existing packing material in accordance with applicable regulations or recycle it.

The SIRIUS 3RN2 thermistor motor protection relays can be recycled thanks to a low-pollutant manufacturing process. For environmentally-friendly recycling and disposal of your electronic waste, please contact a company certified for the disposal of electronic waste.

WARNING

Protection against electrically conductive contamination

The devices must be protected against conductive contamination while taking account of the ambient conditions. One way to achieve this is to install the devices in a control cabinet with the appropriate degree of protection.

You will find more detailed information in IEC 60529, for example.

CAUTION

Protection against electrostatic charge

When handling and installing the SIRIUS 3RN2 thermistor motor protection relays, ensure that the components are protected from being electrostatically charged. Changes to the system configuration and wiring are only permissible while the supply voltage is switched off.
Connection of SIRIUS 3RN2 thermistor motor protection relays is only permissible when the power supply is switched off.

2.2 Intended use

WARNING

Hazardous Voltage
Can Cause Death, Serious Injury, or Property Damage.
Intended Use of Hardware Products

This equipment is only allowed to be used for the applications described in the catalog and in the technical description, and only in conjunction with non-Siemens equipment and components recommended by Siemens.

Correct transport, storage, installation and assembly, as well as careful operation and maintenance, are required to ensure that the product operates safely and without faults.

2.3 Current information about operational safety

Important note for maintaining operational safety of your system

WARNING

Hazardous Voltage
Can Cause Death, Serious Injury or Risk of Property Damage

Please take note of our latest information

Systems with safety-related characteristics are subject to special operational safety requirements on the part of the operator. The supplier is also obliged to comply with special product monitoring measures. For this reason, we publish a special newsletter containing information on product developments and features that are (or could be) relevant to operation of safety-related systems. By subscribing to the appropriate newsletter, you will ensure that you are always up-to-date and able to make changes to your system, when necessary:

SIEMENS Newsletter (http://www.industry.siemens.com/newsletter) Subscribe to the following newsletter under "Products & Solutions":

- Control Components and System Engineering News

ATEX 3

3.1 Safety and commissioning instructions for hazardous areas

Information and standards

Increased danger in hazardous areas means it is necessary to observe the following notes and standards carefully:

- EN 60079-14/VDE 0165-1 for electrical apparatus for explosive gas atmospheres
- EN 60079-17 Inspection and maintenance of electrical installations in hazardous areas.
- EN 50495 Safety devices required for the safe functioning of equipment with respect to explosion risks

The following SIRIUS 3RN2 thermistor motor protection relays with short-circuit detection are approved for Equipment Group II, Category (2) in Area "G" (areas in which potentially explosive gas, vapor, mist, or air mixtures are present) and are additionally approved for Area "D" (areas containing combustible dust):

- 3RN2011
- 3RN2012-.B.30
- 3RN2013
- 3RN2023

PTB 15 ATEX 3011 II (2) G [Ex e] [EX d] [Ex px]
II (2) D [EX t] [Ex p]

SIRIUS 3RN2 thermistor motor protection relays are not intended for installation in hazardous areas. If they are installed in a potentially explosive atmosphere, the SIRIUS 3RN2 thermistor motor protection relays must be adapted to the applicable type of protection.

The machine or plant must shut down immediately if the SIRIUS 3RN2 thermistor motor protection relay is tripped, even if connected through a frequency converter. This must be implemented with circuitry.

SIRIUS 3RN2 thermistor motor protection relays with functional safety in accordance with EN 50495 are suitable for protecting explosion-proof motors/machines.

On devices with a supply voltage of 24 V AC/DC, you must ensure galvanic separation with a battery network or a power supply unit with galvanic separation (e.g. isolating transformer) (does not apply to 3RN2013-.BA30).

A SIRIUS 3RN2 thermistor motor protection relay set to "automatic RESET" mode will be reset automatically after the recovery time has elapsed, without the RESET button being pressed. An additional ON button has to be used to ensure that the motor does not start up automatically following tripping. You must not use "Automatic RESET" mode in applications where there is a risk of personal injury or damage to property if the motor restarts unexpectedly.

A risk analysis must be performed for the complete plant or machine. If this analysis yields a lower hazard potential (category 1), all SIRIUS 3RN2 thermistor motor protection relays can be used, provided the safety regulations are observed.

WARNING

Personal injury and damage to property

All connection, commissioning and maintenance work must be performed by qualified, responsible personnel. Improper handling may result in serious personal injury and considerable damage to property.

Cable routing

The measuring circuit cables must be routed as separate control cables. Use of cores from the power supply cable of the motor or any other main supply cables is not permitted. If extreme inductive or capacitive interference is expected as a result of power lines routed in parallel, shielded control cables must be used.

Maximum length of sensor circuit cables for devices without short-circuit detection in the sensor circuit:

Conductor cross section	3RN2000, 3RN2010
2.5 mm^2	2 x 2800 m
1.5 mm^2	2 x 1500 m
0.5 mm^2	2 x 500 m

Maximum length of sensor circuit cables for devices with short-circuit detection [1]:

Conductor cross section	3RN2011, 3RN2012, 3RN2013, 3RN2023
2.5 mm^2	2 x 250 m
1.5 mm^2	2 x 150 m
0.5 mm^2	2 x 50 m

[1] Short-circuits in the sensor circuit are detected up to this maximum cable length.

Safety data

Safety data calculated according to DIN EN ISO 13849 and IEC 61508 for an ambient temperature of 40 °C and self-heating of 15 °C	
SIL	1
Performance level (according to DIN EN ISO 13849)	C
Category (according to DIN EN ISO 13849)	Cat. 1
Architecture	1oo1
HFT	0
Safety device type	Type B
λ_S	8.26E-07
λ_{DD}	6.80E-08
λ_{DU}	3.08E-07
SFF	≥ 60 %
PFD	≤ 1.5E-02
PFH_d	≤ 1.5E-06
MTBF	≥ 50 years
$MTTF_d$ (according to EN ISO 13849)	High
DC_{avg} (according to DIN EN ISO 13849)	None
T1 value (repeat test)	≤ 3 years (DIN EN 60079-17, Section 4.4)

Note

Currently valid safety values

You can find the currently valid safety values in the Siemens Industry Online Support (https://support.industry.siemens.com/cs/ww/en/ps/).

Installation and commissioning

SIRIUS 3RN2 thermistor motor protection relays are suitable for snap-on mounting onto a 35 mm standard rail in accordance with EN 60715 or for screw mounting with an adapter (accessory).

Any mounting position is possible.

NOTICE
Test the protection function Test the protection function before commissioning.

Notes on configuration

Install the measuring circuit cables as separate control cables. Use of cores from the power supply cable of the motor or any other main supply cables is not permitted. If extreme inductive or capacitive interference is expected as a result of power lines routed in parallel, use shielded control cables.

NOTICE
Use in hazardous areas When used in a hazardous area, the thermistor motor protection relays must not be operated with automatic RESET (terminals Y1 and Y2 permanently jumpered).

User test (repeat test)

Repeat testing in accordance with EN 60079-17 can be combined with the user test. Operation of the SIRIUS 3RN2 thermistor motor protection relay must be discontinued if test results are negative.

The test must be performed by a qualified person familiar with the specified standards.

The test function can be activated and a trip simulated by pressing the blue TEST/RESET button for > 2 s. Correct function is only ensured if the unit is tripped.

Maintenance and repair

These devices are maintenance-free.

Only the manufacturer may perform repairs on the SIRIUS 3RN2 thermistor motor protection relay.

3.2 Use in areas subject to an explosion hazard due to gases or dust

SIRIUS components meet a wide range of requirements for operation in hazardous areas and for switching and protecting components used in hazardous areas.

Types of protection in accordance with ATEX Directive 2014/34/EU

3RN2 thermistor motor protection relays are suitable for overload protection of explosion-proof motors with protection type Ex e. The relays meet the requirements of EN 60079. They are approved under Device Group II, Category (2) for motors operated in Area "G" (areas in which potentially explosive gas, vapor, mist, and air mixtures are present) and additionally in Area "D" (areas containing combustible dust).

The 3RN2 thermistor motor protection relays are not intended for installation in hazardous areas. If they are installed in a hazardous area, the 3RN2 thermistor motor protection relays must be adapted to the applicable type of protection.

For 3RN2 thermistor motor protection relays, the EC type examination certificate is available for Group II, Category (2) G [Ex e] [Ex d] [Ex px] and D [Ex t] [Ex p]. The number is: PTB 15 ATEX 3011

Further information and certificates are available for download on the Internet (http://www.siemens.com/automation/service&support).

You will find further information on explosion protection (ATEX) on the Internet (http://www.siemens.com/sirius/atex).

All ATEX-certified 3RN2 thermistor motor protection relays meet the requirements of Category 2 (EN ISO 13849-1):

- 3RN2011
- 3RN2012-..30
- 3RN20.3

Description

4

4.1 Device overview

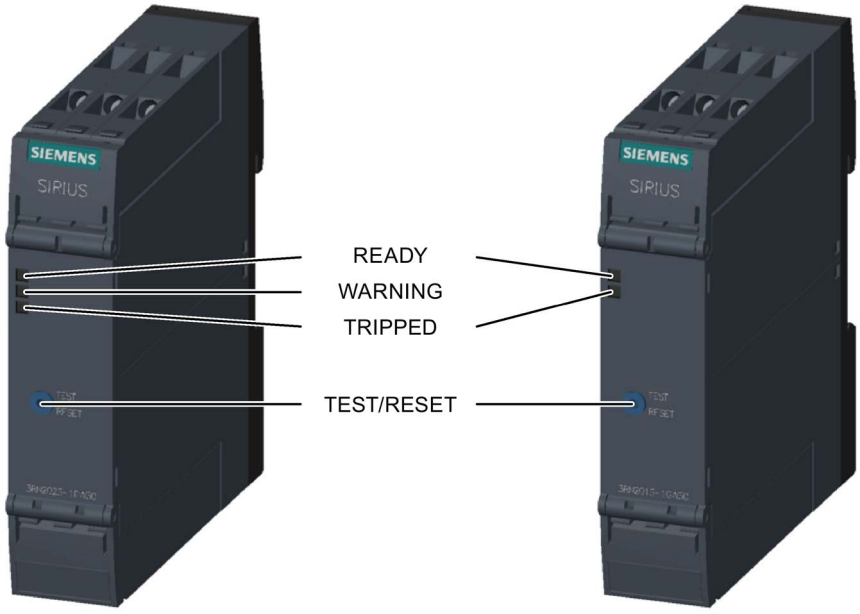

4.2 Device description

General information

SIRIUS 3RN2 thermistor motor protection relays are thermal protection devices that are suitable, in combination with type A PTC thermistors, for monitoring temperatures of electrical drives, transformer windings, oils, bearings, air, etc.

The most frequent application is monitoring of three-phase motors in which the motor manufacturer has fitted a PTC sensor into every winding overhang and in which these PTC sensors are connected in series.

Type A PTC temperature sensor

If a type A temperature sensor is connected to a thermistor motor protection relay, compliance with the operating temperatures is assured (on pick-up and reset) according to IEC 60947-8.

The characteristic curves of the Type A temperature sensors are described in the standards IEC 60947-8, EN 44081, and EN 44082.

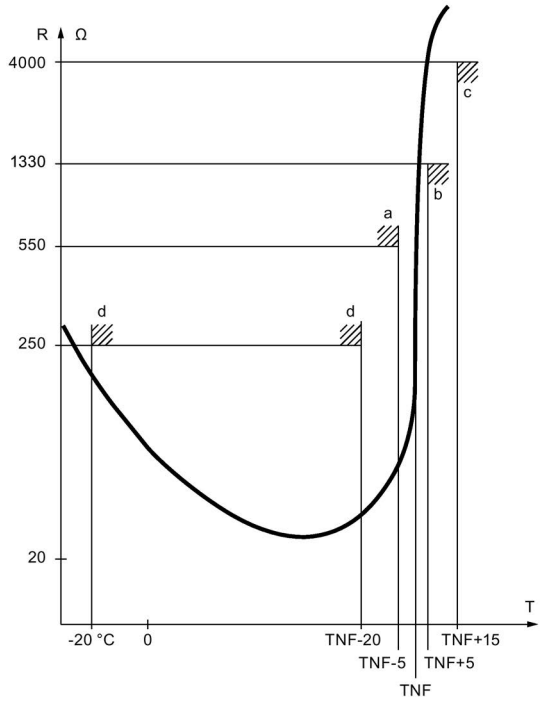

Figure 4-1 Typical characteristic curve of a type A sensor (logarithmic scale)

Depending on the number of sensors connected in series, the following tripping and restart temperatures will result based on the TNF (rated response temperature of the sensor):

	Tripping temperature	Restart temperature
3 sensors	TNF +3K	TNF -7K
6 sensors	TNF -4K	TNF -19K

(The specified temperatures are limit values.)

Color codes

A PTC temperature sensor has a nonlinear change in temperature. However, at a certain temperature, its resistance increases suddenly. This temperature is known as the rated response temperature (TNF).

PTC sensors are available on the market with different rated response temperatures, which are normally chosen by the motor manufacturer based on the maximum permissible motor temperature and installed in the windings.

Because the resistance characteristic values are identical for all types, you do not need to concern yourself with the actual temperature limit of the motor. The 3RN2 thermistor motor protection relay trips reliably when the rated response temperature is exceeded.

You can see the rated response temperatures by the colors of the thermistor sensor cables because the colors are standardized:

TNF (°C)	Color code
60	white/gray
70	white/brown
80	white/white
90	green/green
100	red/red
110	brown/brown
120	gray/gray
130	blue/blue
140	white/blue
145	white/black
150	black/black
155	blue/black
160	blue/red
170	white/green
180	white/red

Benefit

- Thanks to direct motor protection, overdimensioning of the motors is not necessary
- No settings are required on the SIRIUS thermistor motor protection relay.
- Semiconductor-compatible output thanks to versions with hard gold-plated contacts
- Rapid error diagnosis thanks to SIRIUS thermistor motor protection relays that indicate wire break and short-circuits in the sensor circuit
- All SIRIUS thermistor motor protection relays have removable terminals
- All SIRIUS thermistor motor protection relays have screw-type terminals or push-in terminals

Bimetallic switch

In some applications, bimetallic switches (e.g. Klixon, Thermoclick) are used as sensors instead of PTC temperature sensors. Bimetallic switches are temperature and current-dependent NC contacts and are available for different temperature ranges.

Because bimetallic switches have practically no resistance below their opening temperature, short-circuit detection is not possible when using bimetallic switches.

A bimetallic switch can be used for versions 3RN2000 and 3RN2010 on the SIRIUS thermistor motor protection relay.

Note

Never use bimetallic switches in applications subject to an explosion hazard!

Because of their non-standardized tripping characteristic, bimetallic switches must **not** be used in applications where there is an explosion hazard. Use type A PTC sensors instead!

4.3 Device versions

SIRIUS 3RN2 thermistor motor protection relays are available in the following versions:

- 3RN2000 compact units
- 3RN2010 standard units
- 3RN2012-.BW31 bistable devices
- 3RN2011, 3RN2012-.B.30, 3RN2013 standard units with ATEX approval
- 3RN2023 devices with ATEX approval and 2 sensor circuits for warning and disconnection

Sizes

The overall height of all 3RN2 thermistor motor protection relays is 100 mm. The overall depth is a standard 90 mm. The 3RN2 thermistor motor protection relays are designed in two widths:

- 17.5 mm
  This overall width is used for the 3RN2000 compact tripping relays with 1 changeover contact and with A1 jumpered contact root of the changeover contact and the 3RN2010-.C.30 with 1 NC contact and 1 NO contact. The units have 8 possible terminals.
- 22.5 mm
  This overall width is used for all other relays and provides 12 possible terminals.

You will find the precise dimensions in the Dimension drawings (Page 61) chapter.

4.4 Special features

Operating temperature

For operation from -25 °C to +60 °C, there are no restrictions for the control supply, switching current, or ON time.

Wide voltage range

All 3RN2 thermistor motor protection relays are available for supply voltages 24 V AC/DC and 24 to 240 V AC/DC.

4.5 Area of application

Direct motor protection through temperature monitoring of the motor winding offers 100 % motor protection even under the most difficult ambient conditions, without the need to make adjustments on the SIRIUS thermistor motor protection relay. Versions with hard gold-plated contacts additionally ensure a switching reliability that is higher than that of an electronic control.

Direct motor protection:

- At increased ambient temperatures
- When switching frequency is too high
- When starting and braking operations are too long
- Used together with frequency converters (low speeds)

Mounting

5

5.1 Warning notices

Warning notices before installation, wiring, and commissioning

⚠ WARNING
Hazardous voltage! **Causes electric shock and burns when touched.** Turn off and lock out all power supplying this device before working on this device.

Note

The following figures are for illustrative purposes only!

The figures below show a 22.5-mm housing. The overall width, overall depth, terminals (type and number of terminals) and accessories and mounted components are similar may differ from the actual product.

5.2 Terminal coding

You can fit the terminals with coding pins (3ZY1440-1AA00). This helps you to avoid errors when replacing the terminals.

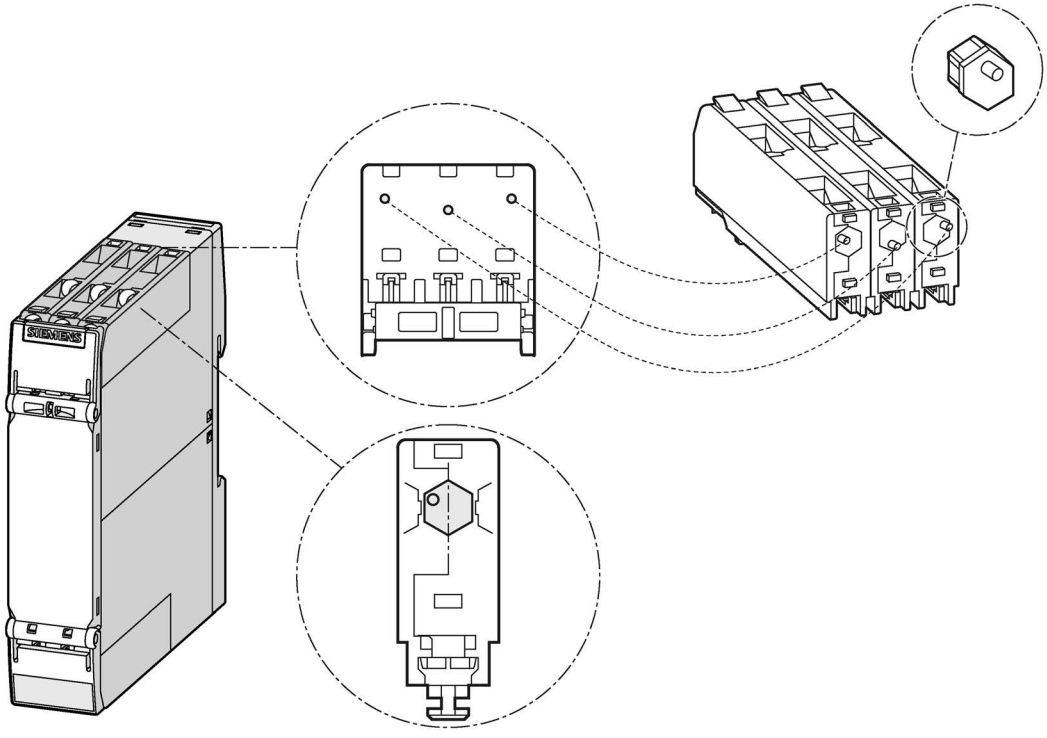

5.3 Mounting the devices on a standard mounting rail

Requirements

- A horizontal 35-mm wide mounting rail in accordance with DIN EN 60715 has been properly secured at the installation location.

Procedure

Step	Instructions	Figure
1	Place the back of the device onto the upper edge of the standard mounting rail.	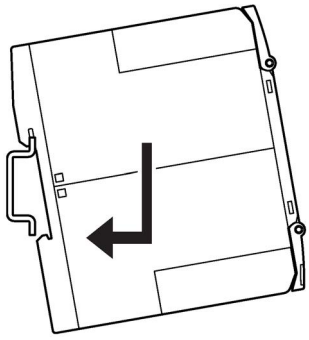
2	Press the lower half of the device against the DIN rail until the device engages.	

5.4 Disassembling devices from a standard mounting rail

⚠ WARNING
Hazardous Voltage **Can Cause Death, Serious Injury, or Damage to Property.** Before starting work, therefore, disconnect the system and devices from the power supply.

Requirements

- The terminals have been removed or disconnected.

Procedure

Step	Instructions	Figure
1	Press the device downwards.	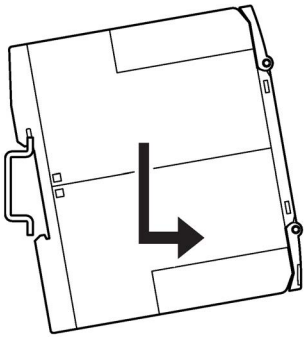
2	Pull the lower half of the device away from the standard mounting rail.	
3	Lift the device from the upper edge of the DIN rail.	

5.5 Mounting the devices on a wall

Requirements

Please note the following requirements for mounting on a level surface:

- A vertical mounting surface is recommended for the housing.
- Two correctly drilled holes, threaded or with plug on the level surface
  Refer to the dimension drawings in the Dimension drawings (Page 61) chapter for the distances between the drill holes.
- Two screws to fit the M4 x 12 holes in accordance with DIN 784.
- Two lugs for screw fastening, you will find the article numbers in the Spare parts/accessories (Page 67) chapter.

Procedure

Step	Instructions	Figure
1	Insert the securing brackets into the openings provided on the device until they engage.	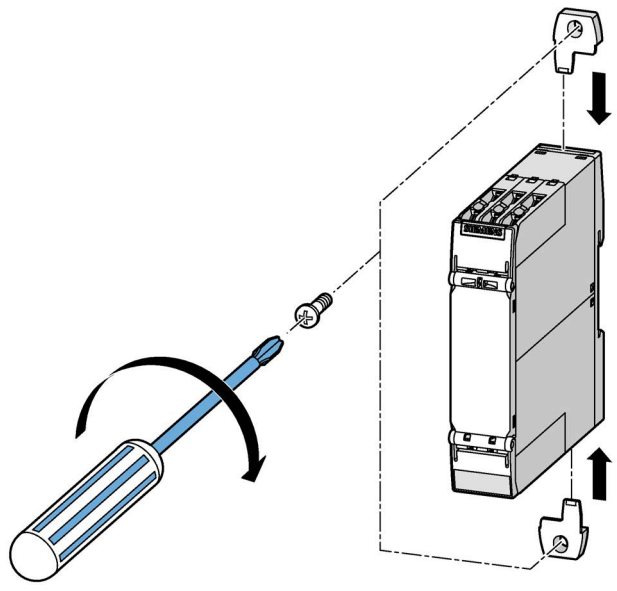
2	Hold the device up to the level surface prepared for screw fastening.	
3	Insert the head screws through the corresponding elongated holes in the fixing lugs.	
4	Screw the device securely onto the level surface. Tightening torque: 1 Nm	

5.6 Removing the devices from the wall

WARNING
Hazardous Voltage **Can Cause Death, Serious Injury, or Property Damage.** Before starting work, therefore, disconnect the system and devices from the power supply.

Requirements

- The terminals have been removed or disconnected.

Procedure

Step	Instructions	Figure
1	Hold the device firmly.	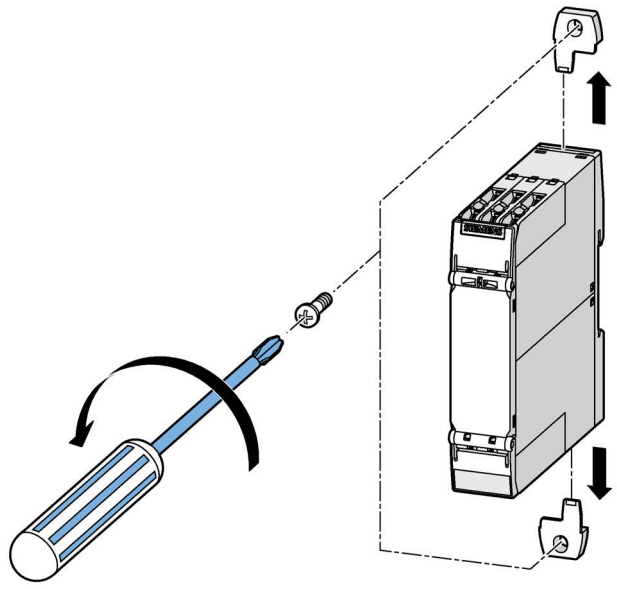
2	Unscrew the cap screws.	
3	Lift the device from the level surface.	
4	Remove the securing brackets from the device.	

Connection

6

6.1 Terminal assignment

Location of the connections

The inside faces of the terminal covers are labeled with the designations of the relevant terminals. The position of the label corresponds to the position of the respective terminal.

NOTICE
Risk of property damage When using the terminals, you must observe the correct position of the terminals (see inside of cover).

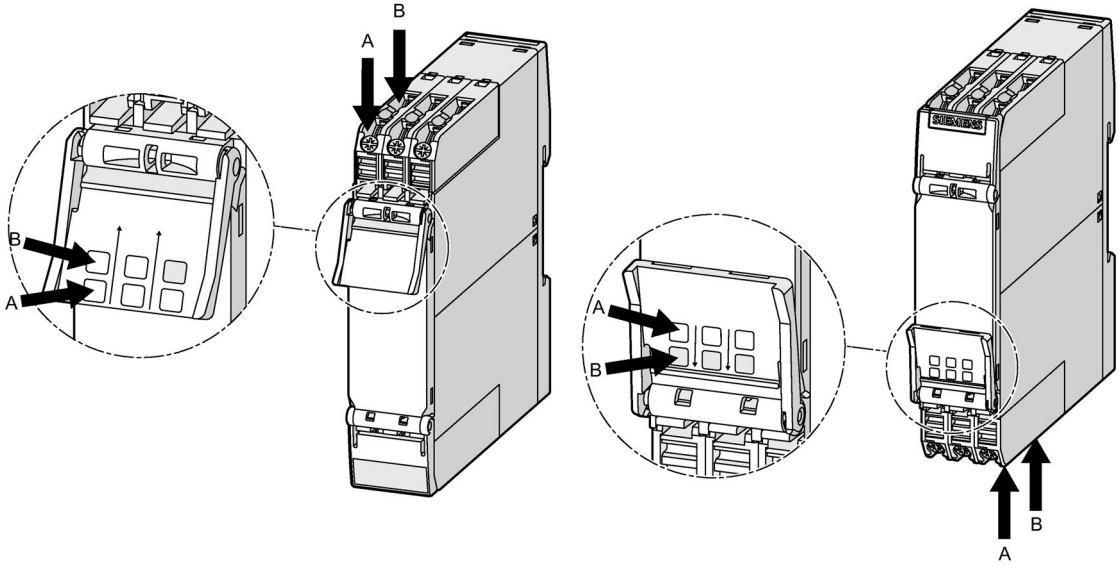

Upper terminal cover

Lower terminal cover

Terminal cover

Note

Terminal cover/article number

The complete article number is engraved on each terminal cover (upper and lower) via laser. The article numbers permit correct assignment of the terminal cover to the unit if you have removed the terminal cover. If a terminal cover is lost or damaged, you can simply print out the figures of the following table in their original size, and glue them into a neutral replacement terminal cover. You can obtain replacement terminal covers from Siemens Support.

You can use the terminal labels for modules with screw-type terminals and spring-loaded terminals.

Parts of the article numbers that are not necessary for assignment to the terminal functions have been replaced by periods as placeholders.

The following tables shows the terminal assignments in the terminal covers of the SIRIUS thermistor motor protection relays:

Module version		Inscription of the terminal cover		
		Upper terminal cover	Lower terminal cover	Terminal assignment on the device
Overall width 17.5 mm				
Compact units	3RN2000-.AA30	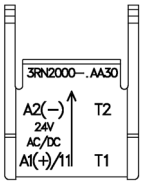	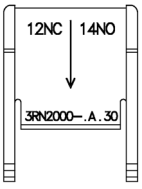	
	3RN2000-.AW30	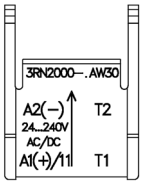		
Standard units	3RN2010-.CA30	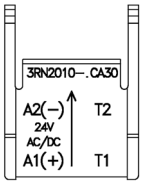	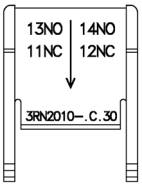	
	3RN2010-.CW30	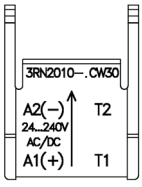		

Module version		Inscription of the terminal cover		
		Upper terminal cover	Lower terminal cover	Terminal assignment on the device
Overall width 22.5 mm				
Standard units	3RN2010-.BA30	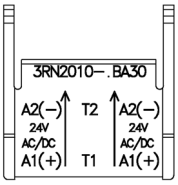	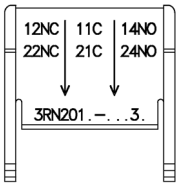	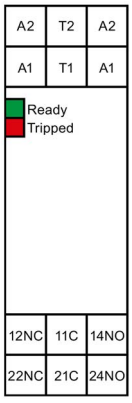
	3RN2010-.BW30	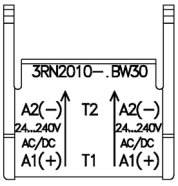		
	3RN2011-.BA30	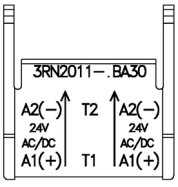		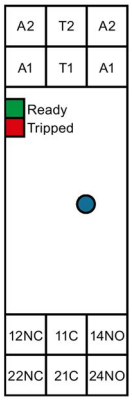
	3RN2011-.BW30	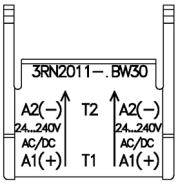		
	3RN2012-.BA30 3RN2013-.BA30	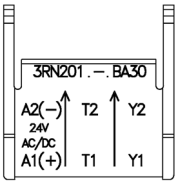		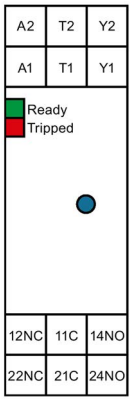
	3RN2012-.BW3. 3RN2013-..W30	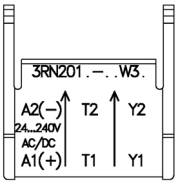		

Module version		Inscription of the terminal cover		
		Upper terminal cover	Lower terminal cover	Terminal assignment on the device
Overall width 22.5 mm				
"Warning and tripping" device	3RN2023-.DW30	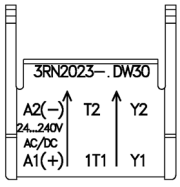	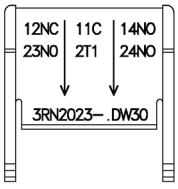	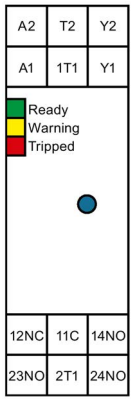

The table below contains an explanation of the terminal cover designations used:

Terminal designation	Explanation
A1/11 (applies to 3RN2000 only)	Rated control supply voltage ~/+ Output relay K1 CO contact root
A1(+)	Rated control supply voltage ~/+
A2(-)	Rated control supply voltage ~/-
T1	Thermistor connection contact 1
T2	Thermistor connection contact 2
1T1 (applies to 3RN2023 only)	Thermistor connection for sensor circuit 1, contact 1
2T1 (applies to 3RN2023 only)	Thermistor connection for sensor circuit 2, contact 1
T2 (applies to 3RN2023 only)	Thermistor connection, common contact 2
Y1 and Y2	Connection for remote RESET (NO contact) Y1 and Y2 jumpered: Auto RESET
12NC	Output relay K1 CO contact NC contact
11C	Output relay K1 CO contact root
14NO	Output relay K1 CO contact NO contact
22NC	Output relay K2 CO contact NC contact
21C	Output relay K2 CO contact root
24NO	Output relay K2 CO contact NO contact
23NO/24NO (applies to 3RN2023 only)	Output relay K2 NO contacts (warning)

6.2 Connection data for terminals

	Specification and value for removable terminals with screw-type terminals	Specification and value for removable terminals with spring-loaded terminals (push-in terminals)
Screwdriver 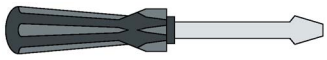	Cross-tip screwdriver Size: PZ 1 x 80 (∅ 4.5 mm) Torque: 0.6 … 0.8 Nm (5.2 ... 7.0 lb/inch)	Flat-head screwdriver (3RA2908-1A) Size: 3 mm for operating the springs DIN 5264-A; 0.5 x 3
Rigid cable 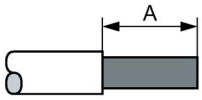	A = 10 mm 1 x 0.5 ... 4.0 mm^2 2 x 0.5 ... 2.5 mm^2	A = 10 mm 1 x 0.5 ... 4.0 mm^2
Flexible conductor with end sleeve 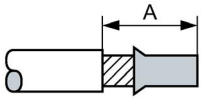	A = 10 mm 1 x 0.5 ... 4.0 mm^2 2 x 0.5 ... 1.5 mm^2 [1]	A = 10 mm 1 x 0.5 ... 2.5 mm^2
Flexible cable 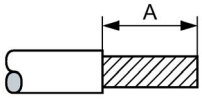	Not permissible	A = 10 mm 1 x 0.5 ... 4.0 mm^2
AWG	1 x 20 … 12 2 x 20 … 14	1 x 20 … 12

[1] When 2 x 1.0 mm^2 end sleeves with a plastic sleeve are used, space problems may arise with the sleeves; as an alternative, you are advised to use end sleeves without plastic sleeves.

6.3 Connecting the screw-type terminals

WARNING
Hazardous Voltage **Can Cause Death, Serious Injury, or Damage to Property.** Before starting work, therefore, disconnect the system and devices from the power supply.

Requirements

- Cross-tip screwdriver size PZ 1 x 80
- For suitable connection cross-sections of the cables, see the Connection data for terminals (Page 38) chapter

Procedure

Step	Instructions	Figure
1	Insert the relevant cable into square on the screw-type terminal until it engages. Hold the cable in the screw terminal.	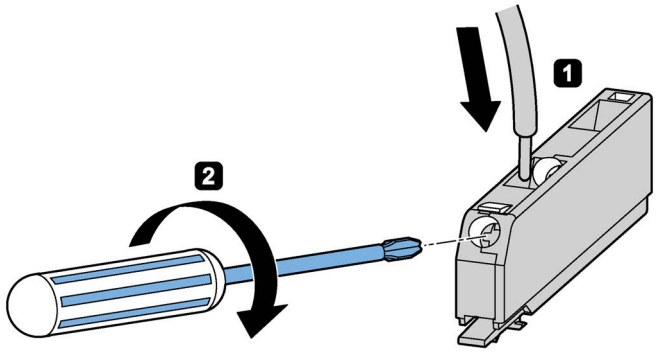
2	Tighten the screw with a torque of 0.6 to 0.8 N.	
3	Pull on the cable to ensure it is screwed tight.	

6.4 Disconnecting the screw-type terminals

WARNING
Hazardous Voltage **Can Cause Death, Serious Injury, or Damage to Property.** Before starting work, therefore, disconnect the system and devices from the power supply.

Requirements

- Cross-tip screwdriver size PZ 1 x 80

Procedure

Step	Instructions	Figure
1	Unscrew the screw of the screw-type terminal.	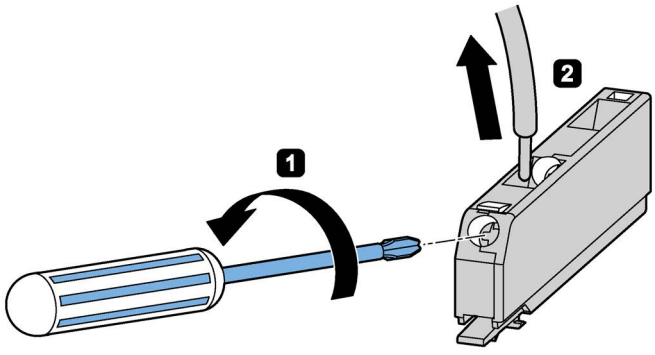
2	Remove the cable from the unscrewed screw-type terminal.	

6.5 Wiring rules for spring-loaded terminals (with push-in technology)

Notes on handling spring-loaded terminals with push-in technology

The space for the spring-loaded terminals is rectangular. The maximum overall dimensions of the conductor to be wired must not exceed 2.4 x 2.8 mm.

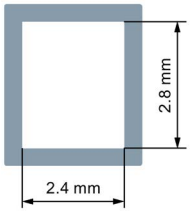

Take note of the orientation of the terminal area, which may require vertical fitting of rectangular-crimped conductors.
To make optimum use of available terminal area, you are advised to choose a form of crimping that creates a corresponding rectangular contour. Trapezoidal crimping is highly suitable in this case.

When a conductor is used that utilizes the full overall height, the terminal spring is deflected to the maximum. It may therefore be difficult to remove this conductor because it requires further deflection of the spring.

6.6 Connect the spring-loaded terminal (push-in)

⚠ WARNING
Hazardous Voltage **Can Cause Death, Serious Injury, or Damage to Property.** Before starting work, therefore, disconnect the system and devices from the power supply.

The spring-loaded (push-in) connections allow wiring without tools for rigid conductors or conductors equipped with end sleeves.

For wiring finely-stranded or stranded conductors without end sleeves on spring-loaded (push-in) terminals, a screwdriver is required to open the spring terminal.

Requirements

- DIN 5264 screwdriver with size 0.5 x 3 mm (for finely-stranded conductors only). (Article number of the screwdriver: 3RA2908-1A)
- For suitable conductor cross sections, see the Connection data for terminals (Page 38) chapter

Procedure

Table 6- 1 Rigid conductors or conductors equipped with end sleeves

Step	Instructions	Figure
1	Insert the cable into the oval opening as far as it will go.	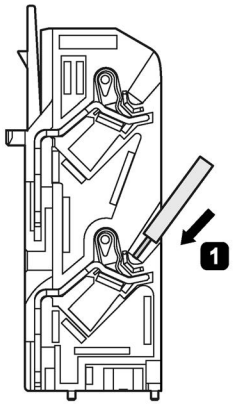
2	Pull on the cable to ensure it is tight.	

Table 6- 2 Finely stranded cables without end sleeve

Step	Instructions	Figure
1	Insert the screwdriver in the rectangular opening to open the terminal spring (oval opening).	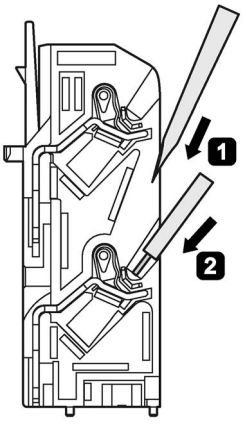
2	Insert the cable as far as it will go into the oval opening and remove the screwdriver.	
3	Pull on the cable to ensure it is tight.	

6.7 Disconnect the spring-loaded terminal (push-in)

⚠ WARNING
Hazardous Voltage **Can Cause Death, Serious Injury, or Property Damage.** Before starting work, therefore, disconnect the system and devices from the power supply.

Requirements

- DIN 5264 screwdriver with size 0.5 x 3 mm
  (article number of the screwdriver: 3RA2908-1A)

Procedure

Step	Instructions	Figure
1	Insert the screwdriver into the rectangular opening of the spring-loaded terminal until it engages.	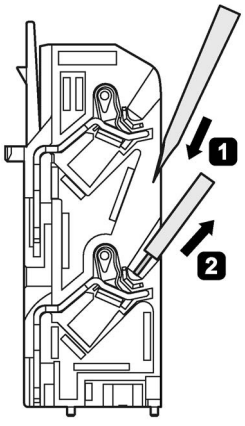
2	Remove the cable from the oval opening.	
3	Remove the screwdriver.	

6.8 Attaching the terminals

WARNING

Hazardous Voltage
Can Cause Death, Serious Injury, or Damage to Property.

Before starting work, therefore, disconnect the system and devices from the power supply.

Requirements

You must have removed the terminals, for the purpose of replacing a device, for example.

Procedure

Note

Screw-type terminals/push-in terminals

Screw-type and push-in terminals are inserted into the module using the same principle.

Step	Instructions	Figure
1	Insert the detachable terminals into the guide rail of the device.	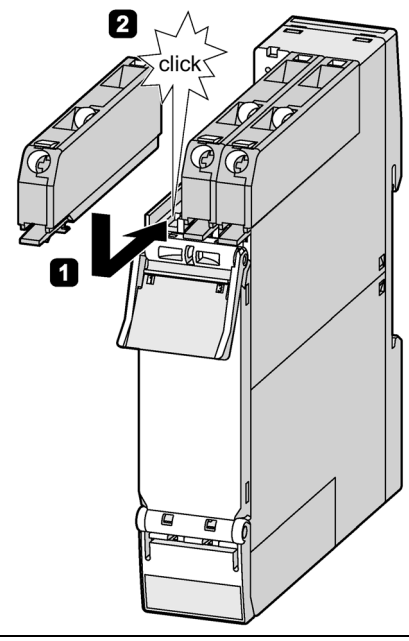
2	Slide the detachable terminals back until they audibly engage.	

6.9 Removing the terminals

WARNING

Hazardous Voltage
Can Cause Death, Serious Injury, or Damage to Property.

Before starting work, therefore, disconnect the system and devices from the power supply.

Procedure

Note

Screw-type terminals/push-in terminals

Screw-type and push-in terminals are removed from the module on the same principle.

Step	Instructions	Figure
1	Press the clip of the terminals upwards.	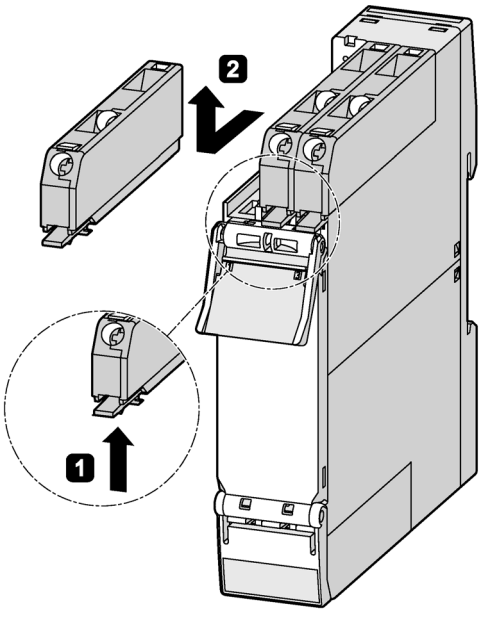
2	Pull the terminals out to the front.	
3	Lift the terminals out of the guide rail of the device.	

Functions

7

The SIRIUS 3RN2 thermistor motor protection relays operate in accordance with the closed-circuit principle and therefore monitor themselves for loss of supply voltage. The exceptions are the warning output on device 3RN2023, which always works on the open-circuit principle, and the bistable relays of the 3RN2012-.BW31, which always retain the last switching state. A micro-interruption in the power supply of less than 30 ms does not change the status of the output relays. In the event of longer voltage dips or an extremely slow increase in the supply voltage, the devices may enter into a system stop in which the output relays drop out (exception: 3RN2012-.BW31) and the devices are only functional again [1)] after restarting the system. The flashing red LED (TRIPPED) indicates a system stop.

1)

NOTICE
Restart Disconnect the devices from the supply voltage for at least 1 s before restarting the system.

The 3RN2011, 3RN2012, 3RN2013, and 3RN2023 devices are additionally equipped with wire-break and short-circuit detection in the sensor circuit.

3RN2000 compact unit

The compact unit, which is only 17.5 mm wide, is equipped with a red LED (TRIPPED) for the tripped indicator and a changeover contact. After the unit has tripped, it is automatically reset once the thermistors have cooled down. The root of the changeover contact is connected to the control voltage (terminal 11 is connected to terminal A1). This unit is particularly suitable in circuits in which the control circuit and signaling circuit have the same potential, e.g. in local control cabinets.

3RN2010, 3RN2011, 3RN2012, and 3RN2013 standard units

The standard units are equipped with two LEDs (READY and TRIPPED) for an operating and tripped display and are available with either 1 NO + 1 NC contacts (3RN2010, overall width 17.5 mm) or with 2 CO contacts. Depending on the version, they are available with Auto RESET (3RN2010), Manual/Remote RESET (3RN2011 – Remote RESET only by switching the unit off and on again, as no Y1/Y2 terminals available) or Manual/Auto and Remote RESET (3RN2012 and 3RN2013). Remote RESET can be achieved by connecting an external pushbutton with a normally-open function to terminals Y1 and Y2 (3RN2012/3RN2013) or by switching the unit off and on again (3RN2011). If terminals Y1 and Y2 are jumpered, the unit is automatically reset once the thermistors have cooled down (Auto RESET). The 3RN2012 and 3RN2013 units are non-volatile. This means a previous trip remains stored in the event of a control supply voltage failure. The thermistor motor protection relay remains in the safe state with an opened output relay until it is intentionally reset by pressing the TEST/RESET button of the unit or an external pushbutton.

When using the 3RN2012-.BW31 devices with bistable relays, the switching status of the output relays does not change in the event of a loss of supply voltage or a system stop, but the connected motor is no longer monitored. Separate supply voltage monitoring is therefore recommended.

3RN2023 "Warning and tripping" thermistor motor protection relays

You can connect two sensor circuits to one 3RN2023 thermistor motor protection relay that act on two separate output relays with 1 NO contact for warning and 1 CO contact for tripping. Thermistors with different rated response temperatures TNF are used to implement the "Warning" and "Tripping" functions. When sensor circuit 2 for "Warning" responds, a yellow LED is lit and when the "Tripping" circuit responds, a red LED is lit. The sensor circuits have different reset response and operating behavior: "Warning" thermistor sensor circuit 2, (terminals 2T1, T2) works only with Auto RESET and according to the open-circuit principle (output relay K2, NO contact). "Tripping" thermistor sensor circuit 1, (terminals 1T1, T2) can be changed from Manual RESET to Auto RESET by jumpering terminals Y1 and Y2. Remote RESET is implemented by connecting an external pushbutton with a normally-open function to these terminals.

Note

Devices with ATEX approval

Note that not all devices have ATEX approval.

All devices with article numbers 3RN2011, 3RN2012-.B.30, 3RN2013, and 3RN2023 have ATEX approval.

All devices with article numbers 3RN2000, 3RN2010 and 3RN2012-..31 (bistable type) do **NOT** have ATEX approval.

In this regard, please also note the information in theSafety and commissioning instructions for hazardous areas (Page 15) chapter.

Performing the device self-test/RESET

Device self-test

A device self-test is performed when the supply voltage is applied, or when the test function is triggered, or cyclically during operation. The starting time is approx. 0.6 s.

The self-test comprises the following actions:

- Internal memory test
- Testing of the sensor circuit for tripping

When the supply voltage is applied, an LED test is additionally performed. The test involves all LEDs lighting up for 2 s.

If the self-test finds an error, the unit shuts down automatically, i.e. all LEDs switched off and output relays opened.

Test function

When not tripped, you can call the test function by pressing the blue TEST/RESET button for longer than 2 s. This simulates tripping the unit due to overtemperature. The test performs an internal device self-test and ensures the function of the display LEDs and the output relay, and All LEDs light up. If Auto RESET is activated, the test function is automatically reset.

After you have triggered the test function, you have to reset the thermistor motor protection relay separately with manual RESET selected.

Note

Switching on

During switch-on (application of a voltage), you must not press the TEST/RESET button.

In this time (starting time), the thermistor motor protection relay checks whether the TEST/RESET button is short-circuited.

Auto RESET

Once the sensor circuit has cooled down, the 3RN2000 and 3RN2010 thermistor motor protection relays are automatically reset. You can activate this function on the units with remote RESET (3RN2012, 3RN2013, and 3RN2023) with an external jumper across terminals Y1 and Y2.

NOTICE
Motor startup The motor must not start up automatically following tripping. You must not use "Automatic RESET" mode in applications where there is a risk of personal injury or damage to property if the motor restarts unexpectedly.

You will find a typical circuit diagram of separate motor starting irrespective of the selected RESET behavior of a thermistor motor protection relay in the Circuit diagrams (Page 65) chapter.

Manual RESET

With the blue TEST/RESET button, you can reset a tripped thermistor motor protection relay again, assuming the sensor circuit for tripping has cooled down again (i.e. resistance of the PTC sensor < 1500 Ω). For this purpose, the blue TEST/RESET button must be kept pressed for between 0.5 and 2 s.

Remote RESET

You can reset a tripped unit again using the pushbutton with a floating NO contact at terminals Y1 and Y2, provided the sensor circuit for tripping has cooled down again (i.e. resistance of the PTC sensor < 1500 Ω).

Remote RESET possible by disconnecting the supply voltage

On the 3RN2011 thermistor motor protection relay, there is a further way of triggering a remote RESET, namely by switching the supply voltage off and then on again. This requires the sensor circuit for tripping to have cooled down (i.e. the resistance of the PTC sensor < 1500 Ω). To safely ensure a complete device reset, you must switch off the supply voltage for at least 500 ms.

All other versions with manual RESET have a non-volatile error memory. This error memory permits a RESET after a trip only by operation of the pushbutton on the device or a connected NO contact, at terminals Y1/Y2.

Alarm, error and system messages

8

8.1 Function charts

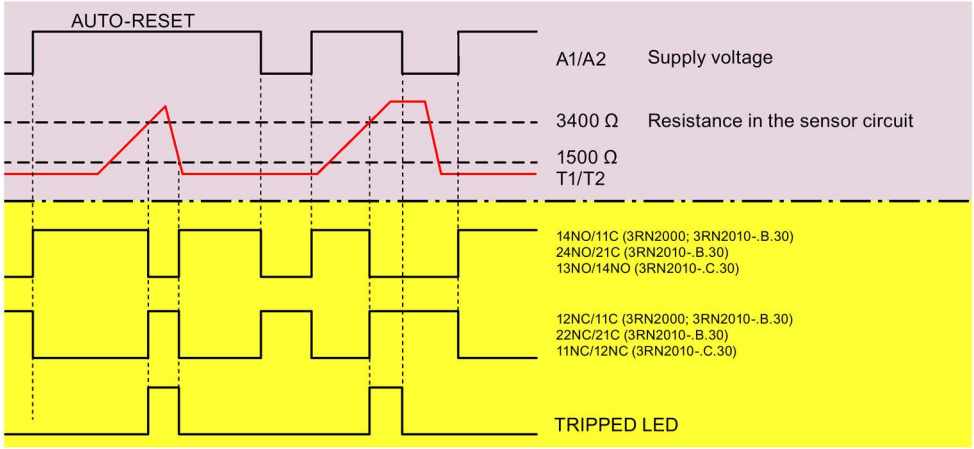

Figure 8-1 3RN2000, 3RN2010 time diagram

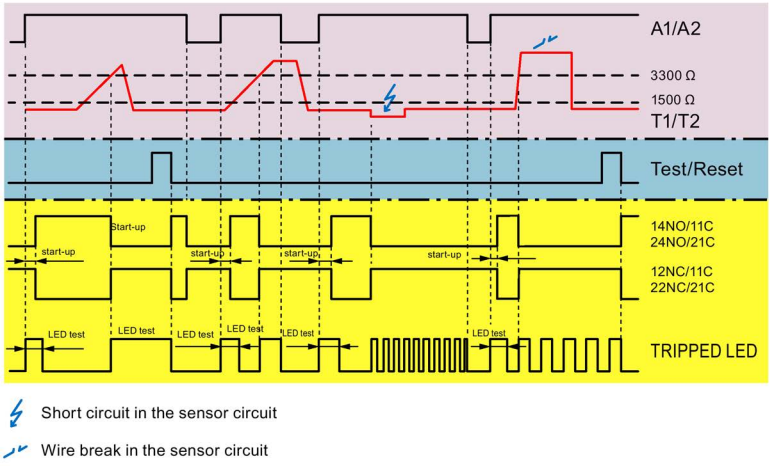

Figure 8-2 3RN2011 time diagram – reset via pushbutton or voltage interruption

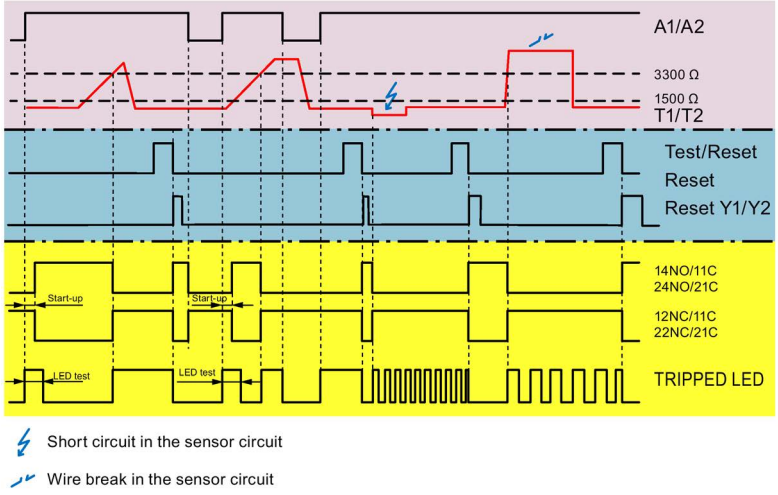

Figure 8-3 3RN2012, 3RN2013 time diagram – reset via remote and pushbutton

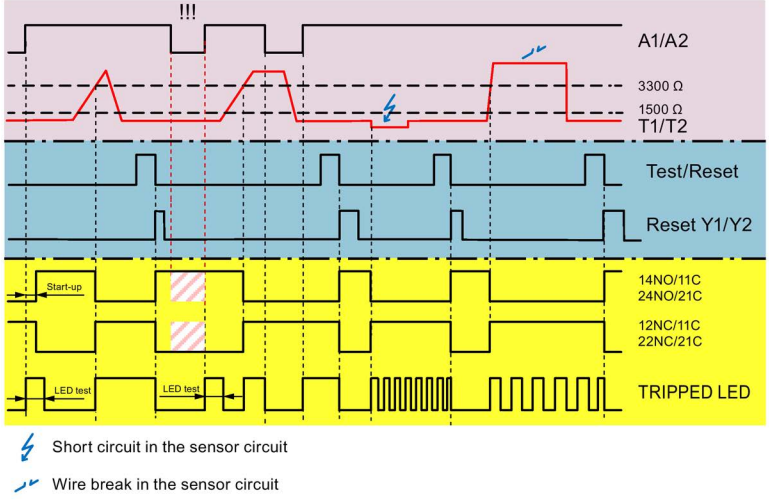

Figure 8-4 3RN2012-.BW31 time diagram – reset via remote or voltage interruption

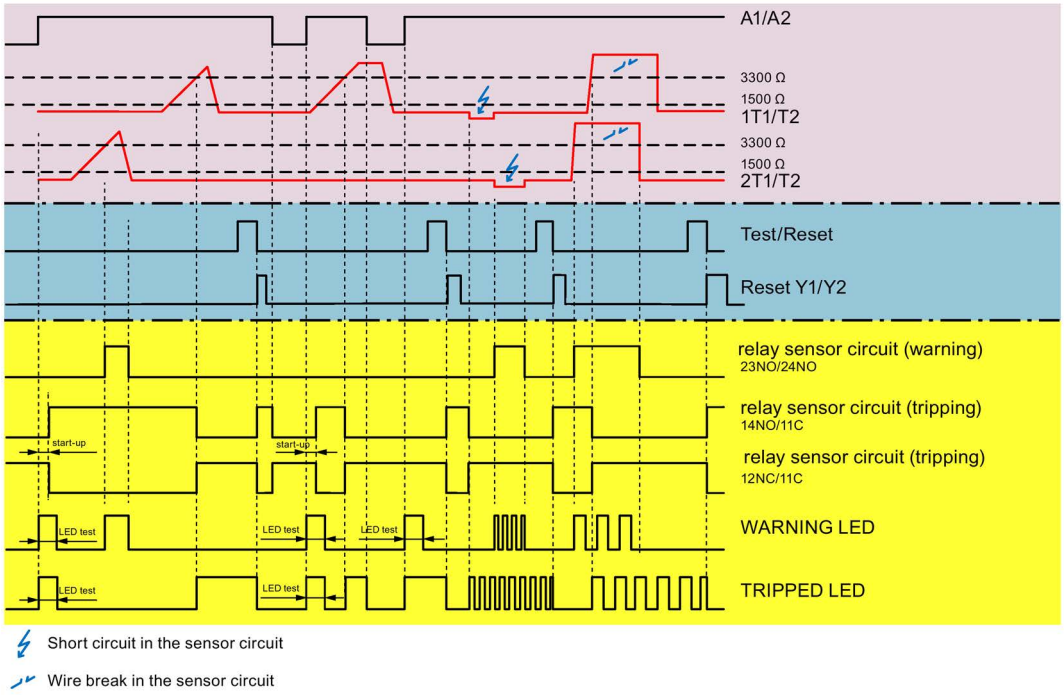

Figure 8-5 3RN2023 time diagram – reset via remote and pushbutton

8.2 LED displays

The table below applies to the following modules:

- 3RN2000-.AA30
- 3RN2000-.AW30

TRIPPED	Meaning
OFF	• Temperature below the permitted limit, or • No power supply
ON	Temperature above the permitted limit

The table below applies to the following modules:

- 3RN2010-.CA30
- 3RN2010-.CW30
- 3RN2010-.BA30
- 3RN2010-.BW30

READY	TRIPPED	Meaning
ON	OFF	Temperature below the permitted limit
ON	ON	Temperature above the permitted limit
OFF	OFF	• No supply voltage, or • Device defective

The table below applies to the following modules:

- 3RN2011-.BA30
- 3RN2011-.BW30
- 3RN2012-.BA30
- 3RN2012-.BW30
- 3RN2012-.BW31
- 3RN2013-.BA30
- 3RN2013-.BW30
- 3RN2013-.GW30

READY	TRIPPED	Meaning
ON	ON	• Self-test is being performed (on startup or after pressing the TEST/RESET button > 2 s) • Temperature above the permitted limit
ON	flickering	Short circuit in the sensor circuit
ON	flashing	Wire break in the sensor circuit
ON	OFF	Temperature below the permitted limit
OFF	flashing	Device in system STOP following inadequate supply voltage [1)]
OFF	OFF	• No supply voltage, or • Device defective

1)

NOTICE
Restart required The device must be disconnected from the supply voltage for at least 1 s before restarting the system.

The table below applies to the following module: 3RN2023-.DW30

READY	WARNING	TRIPPED	Meaning
ON	ON	ON	• Self-test is being performed (on startup or after pressing the TEST/RESET button > 2 s) • Temperature above the permitted limit
ON	flickering	flickering	Short-circuit in the sensor circuits
ON	flashing	flashing	Wire break in the sensor circuits, or common T2
ON	OFF	OFF	Temperature below the permitted limit
ON	ON	OFF	Temperature has exceeded warning threshold but is below the trip threshold
OFF	OFF	flashing	Device in system STOP following inadequate supply voltage [1)]
OFF	OFF	OFF	• No power supply • Device defective • Error detected during self-test • Switch-on/switch-off process

1)

NOTICE
Restart required The device must be disconnected from the supply voltage for at least 1 s before restarting the system.

Technical data

9

9.1 Technical data in Siemens Industry Online Support

Technical data sheet

You can also find the technical data of the product at Siemens Industry Online Support (https://support.industry.siemens.com/cs/ww/en/ps/24302/td).

1. Enter the full article number of the desired device in the "Product" field, and confirm with the Enter key.
2. Click the "Technical data link.

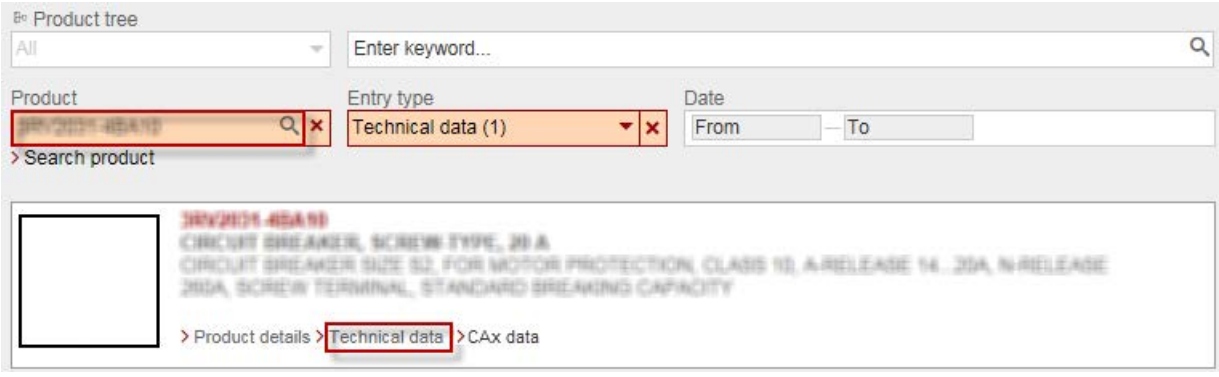

CAx data

10

You can find the CAx data in the Siemens Industry Online Support (https://support.industry.siemens.com/cs/ww/en/ps/24302/td).

1. Enter the full article number of the desired device in the "Product" field, and confirm with the Enter key.
2. Click the "CAx data link.

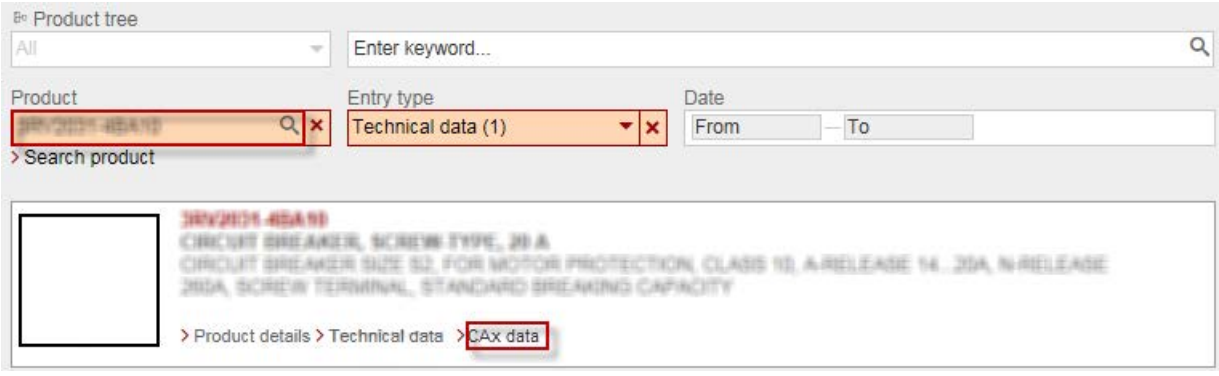

Dimension drawings

11

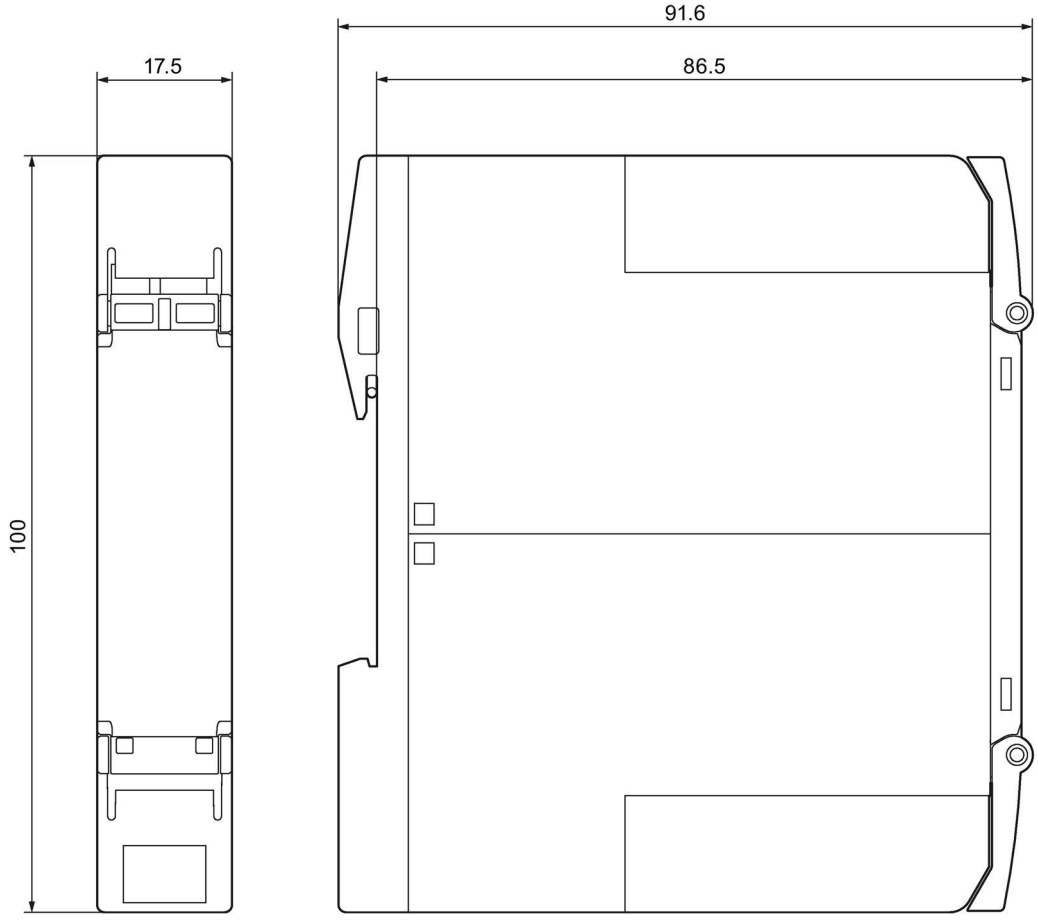

Figure 11-1 Enclosure 17.5 mm for SIRIUS 3RN2 thermistor motor protection relays

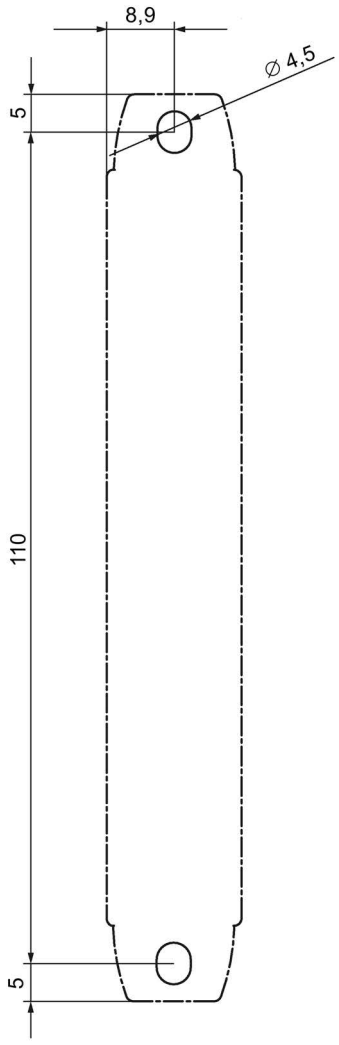

Figure 11-2 Drilling diagram, enclosure 17.5 mm

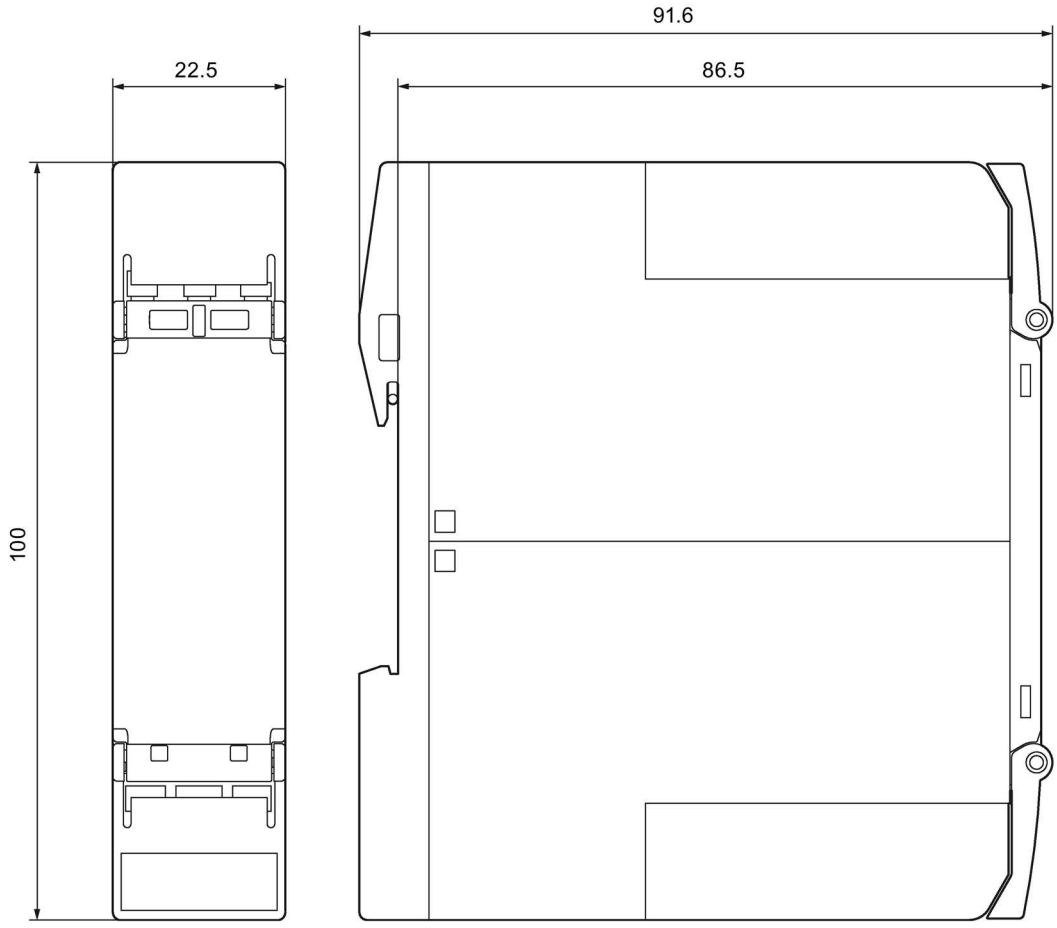

Figure 11-3 Enclosure 22.5 mm (short) for SIRIUS 3RN2 thermistor motor protection relays

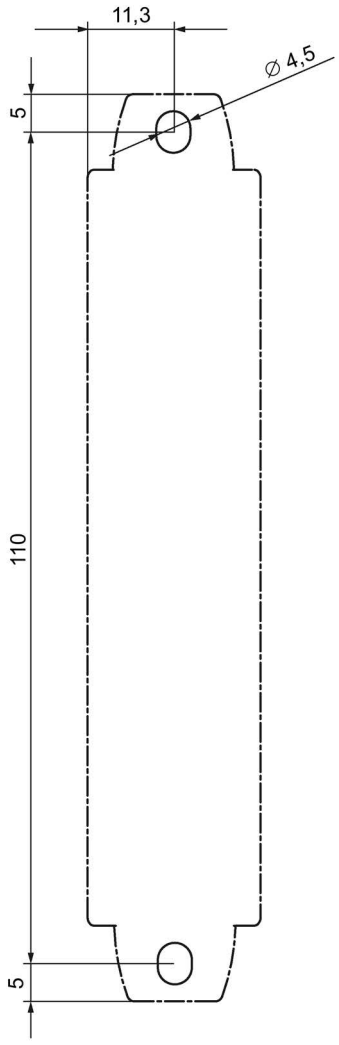

Figure 11-4 Drilling diagram, enclosure 22.5 mm

Circuit diagrams

12

The following figure shows a sample circuit for a 3RN2012 or 3RN2013 thermistor motor protection relay.

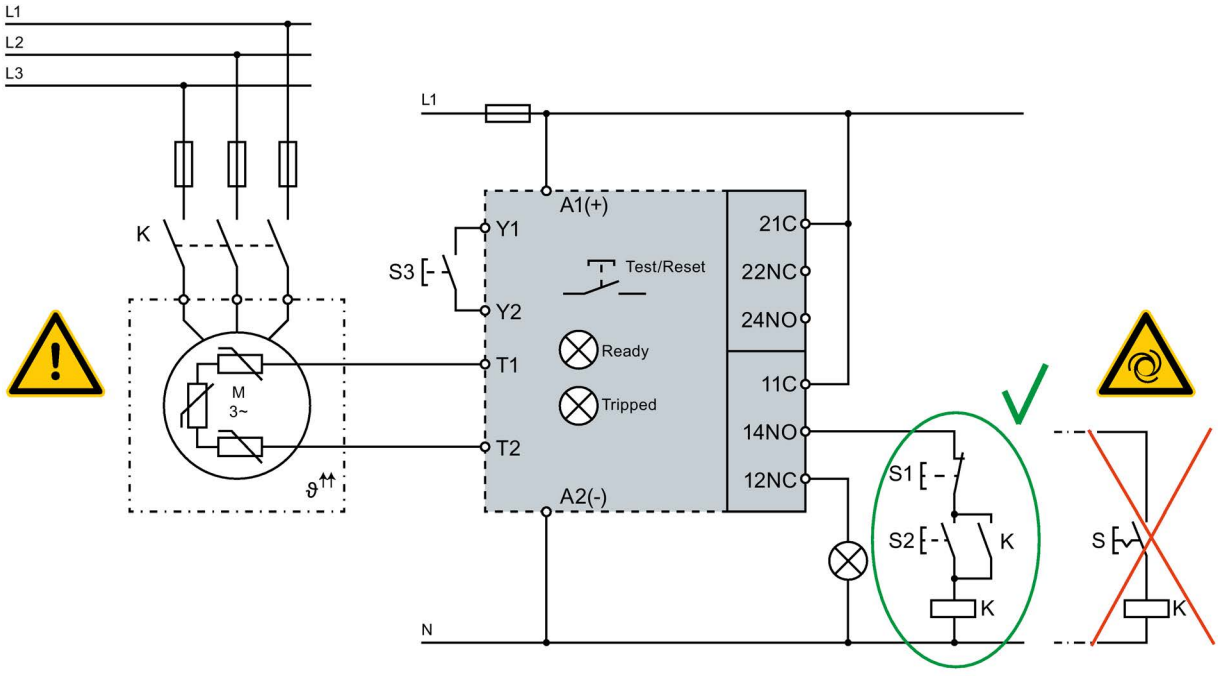

A1(+)	Rated control supply voltage ~/+
A2(-)	Rated control supply voltage ~/-
K	Contactor relay
M	Motor
S	NO contact, latching
S1	NO contact 1
S2	NO contact 2
S3	NO contact 3
T1	Thermistor connection contact 1
T2	Thermistor connection contact 2
Y1, Y2	Connection for remote RESET (NO contact) Y1 and Y2 jumpered: Auto RESET

Spare parts/accessories

13

The table below shows the accessories available for the SIRIUS 3RN2 thermistor motor protection relays:

Designation	Graphic	Article number
SIRIUS terminal, 2-pole, screw-type, 1 x 2.5 mm²		3ZY1122-1BA00
SIRIUS terminal, 2-pole, push-in, 1 x 2.5 mm²		3ZY1122-2BA00
SIRIUS lugs for screw fastening for wall mounting (Contents: 12 units)		3ZY1311-0AA00
Coding pins for SIRIUS terminals		3ZY1440-1AA00

Index

"

"Warning and tripping" device, 37

3

3RN2000, 3RN2010 time diagram, 51
3RN2011 time diagram – reset via pushbutton or voltage interruption, 51
3RN2012, 3RN2013 time diagram – reset via remote and pushbutton, 52
3RN2012-.BW31 time diagram – reset via remote or voltage interruption, 52
3RN2023 "Warning and tripping" thermistor motor protection relays, 48

A

Accessories, 67
Application, 26
Applications & Tools, 9
Approvals, 11
Article No. scheme, 12
ATEX, 15, 19

B

Basic knowledge, 7

C

Cable routing, 16
CAx data, 8, 59
Circuit diagram example, 65
Commissioning, 17
Compact units, 35
Conductor cross section, 16
Connection, 33
Connections, 33
Contamination, 13
CSA, 11

D

DataMatrix code, 10
Declaration of Conformity, 11
Device description
    Benefit, 24
    Bimetallic switch, 24
    Color codes, 23
    General information, 21
    Restart temperature, 22
    Tripping temperature, 22
    Type A PTC temperature sensor, 22
Device overview, 21
Device self-test, 49
Device versions, 25
Dimension drawings, 61
Disassembly
    Devices on a standard mounting rail, 30
    Devices on a wall, 32
Disposal, 13

E

Electrostatic charging, 13

F

Functions, 48
    Compact unit, 47
    Standard units, 48

I

Installation, 17
    Devices on a standard mounting rail, 29
    Devices on a wall, 31
Intended use, 14

L

LED displays, 54

M

Maintenance, 18
Module version, 35, 36
My Documentation Manager, 9

N

Notes on configuration, 18

O

Online Support, 7
Operating temperature, 25
Operational safety, 14

P

Procedure
  Auto RESET, 50
  Device self-test, 49
  Manual RESET, 50
  Remote RESET, 50
  Remote RESET possible by disconnecting the supply voltage, 50
  Test function, 49
Product data sheet, 59
Product Support, 8
Provisions, 11
Push-in technology, 41

R

Recycling, 13
Regulations, 11
Repair, 18
RESET, 49

S

Safety data, 17
Safety information, 13, 14
Screw-type terminals
  Connection, 39
  Disconnection, 40
Shipbuilding approval, 11
SIEMENS Industry Support App, 10
Sizes, 25
Spare parts, 67
Spring-loaded terminal
  Connection, 42
  Disconnection, 44
  Wiring rules, 41
Standard units, 35, 36
Standards, 11, 15

T

Terminal coding, 28
Terminal cover, 34
  Inscription, 35, 36
  lower, 33
  upper, 33
Terminals
  Connection data, 38
  Plug in, 45
  Removal, 46
  Screw-type terminals, 38
  Spring-loaded terminals, 38
Types of protection, 19

U

UL, 11
User test, 18

W

Warning notices
  Commissioning, 27
  Installation, 27
  Wiring, 27
Wide voltage range, 25