MAKING MODERN LIVING POSSIBLE

Installation Guide

VLT® PROFINET MCA 120

VLT® Frequency Converter Series FC 102 • FC 103 • FC 202 FC 301/302

www.danfoss.com/drives

THE REAL DRIVE

Contents

1 Introduction 2
- 1.1 Purpose of the Manual 2
- 1.2 Additional Resources 2
- 1.3 Product Overview 2
- 1.4 Approvals and Certifications 2
- 1.5 Disposal 3
- 1.6 Symbols, Abbreviations and Conventions 3

2 Safety 4
- 2.1 Safety Symbols 4
- 2.2 Qualified Personnel 4
- 2.3 Safety Precautions 4

3 Installation 6
- 3.1 Safety Instructions 6
- 3.2 Mounting 6
- 3.3 EMC-compliant Installation 7
- 3.4 Grounding 7
- 3.5 Cable Routing 7
- 3.6 Topology 8
- 3.7 Setting Address Switches 9
- 3.8 Electrical Installation 10
- 3.9 Reassembling Cover 12
- 3.10 Applying Power 12
- 3.11 Checking Network Cabling 12

4 Troubleshooting 13
- 4.1 Warnings and Alarms 13
- 4.2 Troubleshooting 13
  - 4.2.1 LED Status 13
  - 4.2.2 No Communication with the Frequency Converter 14
  - 4.2.3 Warning 34 Appears 14

Index 15

 Danfoss A/S © Rev. 07/2014 All rights reserved.

1

1 Introduction

1.1 Purpose of the Manual

This installation guide provides information for the quick installation of a VLT® PROFINET MCA 120 interface in a VLT® frequency converter.
The installation guide is intended for use by qualified personnel. Users are assumed to be familiar with the VLT® frequency converter, with PROFINET technology, and with the PC or PLC that is used as a master in the system.
Read the instructions before installation and ensure that the instructions for safe installation are observed.

VLT® is a registered trademark.

1.2 Additional Resources

Resources available for the frequency converters and optional equipment:

- The *VLT® Operating Instructions* provide the necessary information for getting the frequency converter up and running.
- The *VLT® Design Guide* provides detailed information about capabilities and functionality to design motor control systems.
- The *VLT® Programming Guide* provides greater detail on working with parameters and many application examples.
- The *VLT® PROFINET MCA 120 Installation Guide* provides information about installing the PROFINET and troubleshooting.
- The *VLT® PROFINET MCA 120 Programming Guide* provides information about configuring the system, controlling the frequency converter, parameter access, programming, troubleshooting, as well as some typical application examples.

Supplementary publications and manuals are available from Danfoss. See *www.danfoss.com/BusinessAreas/DrivesSolutions/Documentations/VLT+Technical+Documentation.htm* for listings.

1.3 Product Overview

1.3.1 Intended Use

This installation guide relates to the PROFINET interface. Ordering number:

- 130B1135 (uncoated)
- 130B1235 (conformal coated)

The PROFINET interface is designed to communicate with any system complying with the PROFINET schema version 2.2 and 2.3 standards. PROFINET provides users with the network tools to deploy standard Ethernet technology for manufacturing applications while enabling internet and enterprise connectivity.

VLT® PROFINET MCA 120 is intended for use with:

- VLT® HVAC Drive FC 102
- VLT® Refrigeration Drive FC 103
- VLT® AQUA Drive FC 202
- VLT® AutomationDrive FC 301/FC 302

1.3.2 Items Supplied

When the fieldbus option is not factory mounted, the following items are supplied:

- Fieldbus option
- LCP cradle
- Front covers (in various sizes)
- Stickers
- Accessories bag
- Strain relief (only for A1 and A2 enclosures)
- Installation Guide

1.4 Approvals and Certifications

More approvals and certifications are available. For more information, contact a local partner.

 Danfoss A/S © Rev. 07/2014 All rights reserved.

1.5 Disposal

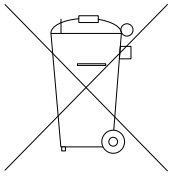

Do not dispose of equipment containing electrical components together with domestic waste.
Collect it separately in accordance with local and currently valid legislation.

1.6 Symbols, Abbreviations and Conventions

Abbreviation	Definition
DCP	Discovery and configuration protocol
EMC	Electromagnetic compatibility
IP	Internet protocol
LCP	Local control panel
LED	Light emitting diode
PC	Personal computer
PLC	Programmable logic control

Table 1.1 Symbols and Abbreviations

Conventions
Numbered lists indicate procedures.
Bullet lists indicate other information and description of illustrations.
Italicised text indicates:

- Cross reference
- Link
- Parameter name

 Danfoss A/S © Rev. 07/2014 All rights reserved.

2 Safety

2

2.1 Safety Symbols

The following symbols are used in this document:

⚠WARNING

Indicates a potentially hazardous situation that could result in death or serious injury.

⚠CAUTION

Indicates a potentially hazardous situation that could result in minor or moderate injury. It can also be used to alert against unsafe practices.

NOTICE

Indicates important information, including situations that can result in damage to equipment or property.

2.2 Qualified Personnel

Correct and reliable transport, storage, installation, operation, and maintenance are required for the trouble-free and safe operation of the frequency converter. Only qualified personnel are allowed to install or operate this equipment.

Qualified personnel are defined as trained staff, who are authorised to install, commission, and maintain equipment, systems, and circuits in accordance with pertinent laws and regulations. Additionally, the qualified personnel must be familiar with the instructions and safety measures described in this document.

2.3 Safety Precautions

⚠WARNING

HIGH VOLTAGE

Frequency converters contain high voltage when connected to AC mains input, DC power supply, or load sharing. Failure to perform installation, start-up, and maintenance by qualified personnel can result in death or serious injury.

- **Installation, start-up, and maintenance must be performed by qualified personnel only.**

⚠WARNING

UNINTENDED START

When the frequency converter is connected to AC mains, DC power supply, or load sharing, the motor may start at any time. Unintended start during programming, service or repair work can result in death, serious injury, or property damage. The motor can start by means of an external switch, a serial bus command, an input reference signal from the LCP or LOP, via remote operation using MCT 10 software, or after a cleared fault condition.
To prevent unintended motor start:

- **Disconnect the frequency converter from mains.**
- **Press [Off/Reset] on the LCP, before programming parameters.**
- **The frequency converter, motor, and any driven equipment must be fully wired and assembled when the frequency converter is connected to AC mains, DC power supply, or load sharing.**

⚠WARNING

DISCHARGE TIME

The frequency converter contains DC-link capacitors, which can remain charged even when the frequency converter is not powered. Failure to wait the specified time after power has been removed before performing service or repair work, can result in death or serious injury.

- **Stop motor.**
- **Disconnect AC mains and remote DC-link power supplies, including battery back-ups, UPS, and DC-link connections to other frequency converters.**
- **Disconnect or lock PM motor.**
- **Wait for the capacitors to discharge fully, before performing any service or repair work. The duration of waiting time is specified in the relevant frequency converter *Operating Instructions, Chapter 2 Safety*.**

 Danfoss A/S © Rev. 07/2014 All rights reserved.

⚠WARNING

LEAKAGE CURRENT HAZARD

Leakage currents exceed 3.5 mA. Failure to ground the frequency converter properly can result in death or serious injury.

- **Ensure the correct grounding of the equipment by a certified electrical installer.**

⚠WARNING

EQUIPMENT HAZARD

Contact with rotating shafts and electrical equipment can result in death or serious injury.

- **Ensure that only trained and qualified personnel perform installation, start up, and maintenance.**
- **Ensure that electrical work conforms to national and local electrical codes.**
- **Follow the procedures in this document.**

⚠CAUTION

INTERNAL FAILURE HAZARD

An internal failure in the frequency converter can result in serious injury, when the frequency converter is not properly closed.

- **Ensure that all safety covers are in place and securely fastened before applying power.**

 Danfoss A/S © Rev. 07/2014 All rights reserved.

3 Installation

3.1 Safety Instructions

See *chapter 2 Safety* for general safety instructions.

3.2 Mounting

1. Check whether the fieldbus option is already mounted in the frequency converter. If already mounted, go to step 6.
2. Remove the LCP or blind cover from the frequency converter.
3. Use a screwdriver to remove the front cover and the LCP cradle.
4. Mount the fieldbus option. Mount the option with the Ethernet port facing up for top cable entry (see *Illustration 3.2*).
5. Remove the knock-out plate from the new LCP cradle.
6. Mount the new LCP cradle.

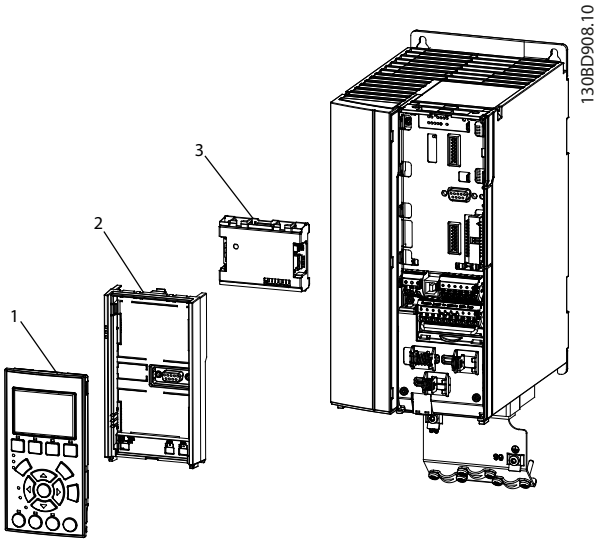

1	LCP
2	LCP cradle
3	Fieldbus option

Illustration 3.1 Exploded View

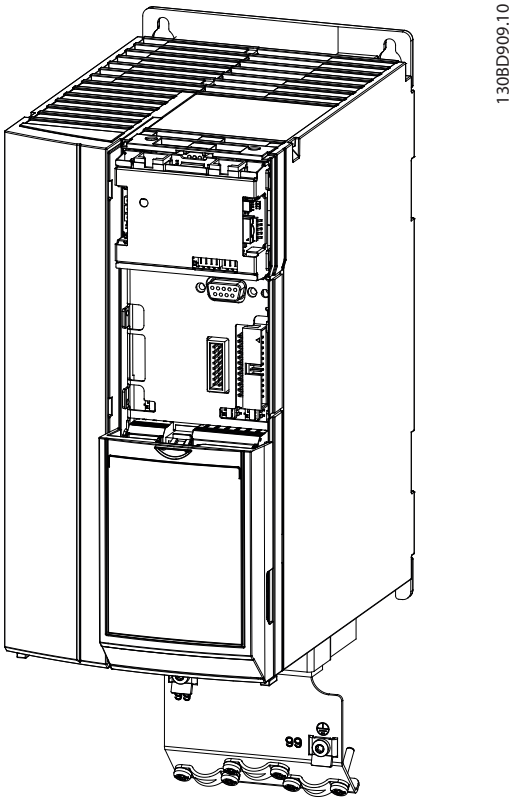

Illustration 3.2 Option Mounted with the Ethernet Port Facing Upwards

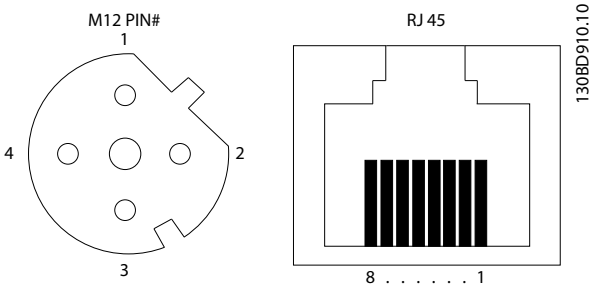

Signal	M12 PIN#	RJ 45
RX +	1	1
TX +	2	3
RX -	3	2
TX -	4	4

Illustration 3.3 PROFINET Connectors

 Danfoss A/S © Rev. 07/2014 All rights reserved.

3.3 EMC-compliant Installation

To obtain an EMC-compliant installation, follow the instructions provided in the relevant frequency converter *Operating Instructions* and *Design Guide*. Refer to the fieldbus master manual from the PLC supplier for further installation guidelines.

3.4 Grounding

- Ensure that all stations connected to the fieldbus network are connected to the same ground potential. When there are long distances between the stations in a fieldbus network, connect the individual station to the same ground potential. Install equalising cables between the system components.
- Establish a grounding connection with low HF impedance, for example by mounting the frequency converter on a conductive back plate.
- Keep the ground wire connections as short as possible.

3.5 Cable Routing

NOTICE

EMC INTERFERENCE

Use screened cables for motor and control wiring, and separate cables for fieldbus communication, motor wiring, and brake resistor. Failure to isolate fieldbus communication, motor, and brake resistor cables can result in unintended behaviour or reduced performance. Minimum 200 mm (7.9 in) clearance between power, motor, and control cables is required. For power sizes above 315 kW, it is recommended to increase the minimum distance of 500 mm (20 in).

NOTICE

When the fieldbus cable crosses a motor cable or a brake resistor cable, ensure that the cables cross at an angle of 90°.

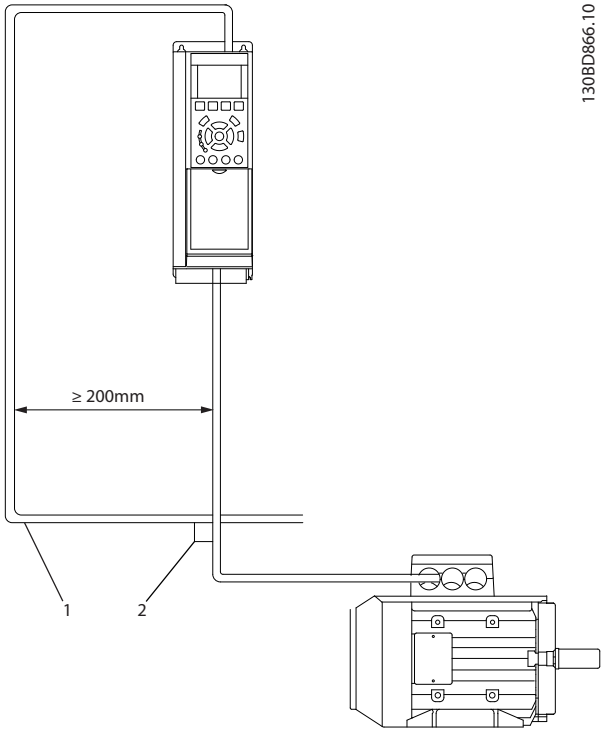

1	Ethernet cable
2	90° crossing

Illustration 3.4 Cable Routing

Danfoss A/S © Rev. 07/2014 All rights reserved.

3

3.6 Topology

The PROFINET module features a built-in Ethernet switch with 2 Ethernet RJ 45/M12 connectors. The module enables the connection of several PROFINET options in a line topology as an alternative to a traditional star topology. The 2 ports are equal. Select and use the 2 ports freely.

Star Topology

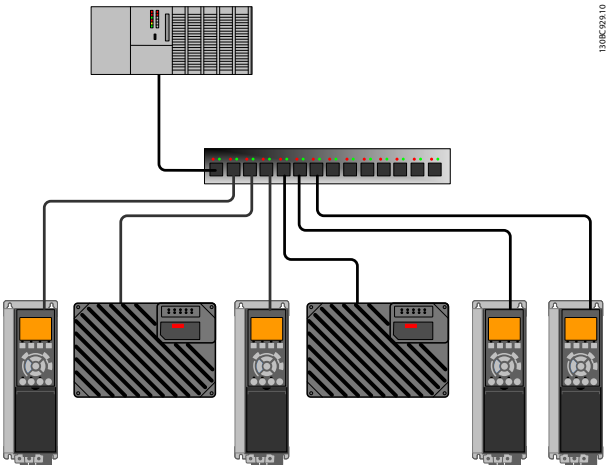

Illustration 3.5 Star Topology

Line Topology

In many installations, line topology enables simpler cabling and the use of smaller Ethernet switches. The PROFINET interface supports line topology with its 2 ports and built-in Ethernet switch.

When line topology is used, take precautions to avoid timeout in the PLC when more than 8 frequency converters are installed in series. Each frequency converter in the network adds a small delay to the communication due to the built-in Ethernet switch. When the update time is too short, the delay can lead to timeout in the PLC. Set the update time as shown in *Table 3.1*. The numbers given are typical values and can vary from installation to installation.

Numbers of frequency converters connected in series	Minimum update time [ms]
<8	2
8-16	4
17-32	8
33-50	16
>50	not recommended

Table 3.1 Minimum Update Time

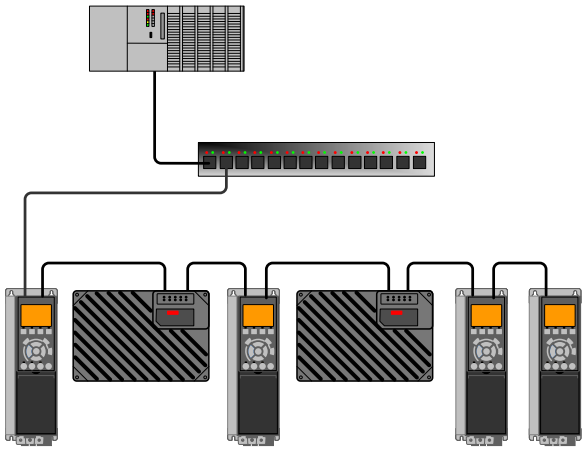

Illustration 3.6 Line Topology

NOTICE

In a line topology, activate the built-in switch by powering all frequency converters, either by mains or a 24 V DC option card.

NOTICE

Installing frequency converters of different power sizes in a line topology may result in unwanted power-off behaviour while using controlword timeout (*8-02 Control Word Source* to *8-06 Reset Control Word Timeout*). It is recommended to mount the frequency converters with the longest discharge time first in the line topology. In normal operation, the larger power size frequency converters have a longer discharge time.

Ring/Redundant Line Topology

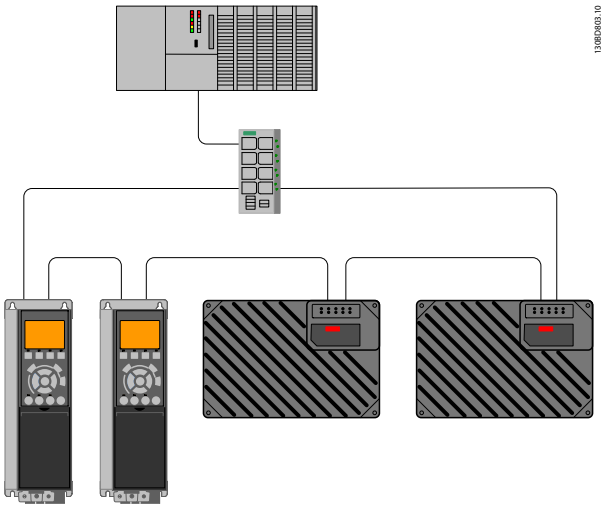

Illustration 3.7 Ring/Redundant Line Topology

 Danfoss A/S © Rev. 07/2014 All rights reserved.

Ring topology can increase the availability of an Ethernet network.

For ring topology:

- Install a special switch (redundancy manager) between the PLC and the frequency converters.
- Configure the redundancy manager switch to clearly define the ports that connect to the ring.

The redundancy manger sends out test frames on its 2 ports where the ring is connected. When no test frames are lost, the redundancy manager keeps the ring in operational. If the switch detects a fault in the ring, it reconfigures the ring into 2 lines instead. The transition time from 1 ring into 2 lines is up to 500 ms, depending on the components installed in the ring. Set the timing of the PLC to ensure that the transition time does not lead to timeout fault.

NOTICE

For ring/redundant line topology, ensure that the redundancy manager switch supports detection of loss of line topology. The switch inside the PROFINET interface does not support this detection.

Recommended design rules

- Pay special attention to active network components when designing an Ethernet network.
- For line topology, a small delay is added with each additional switch in the line. See *Table 3.1* for more information.
- Do not connect more than 50 frequency converters in series. Exceeding this limit can result in unstable or faulty communication.

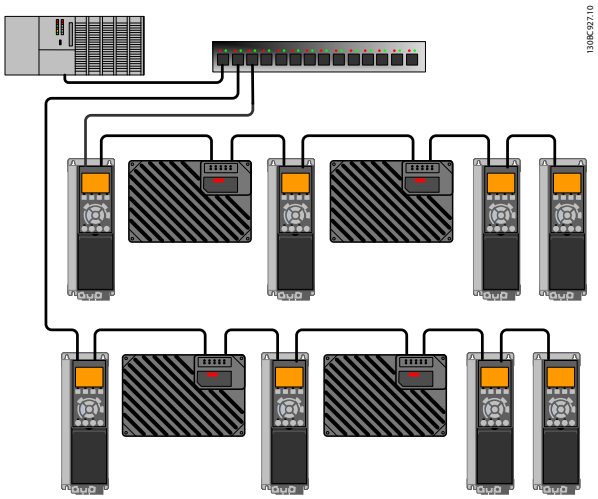

Illustration 3.8 Recommended Design Rules

3.7 Setting Address Switches

The option has address switches that are used to set the station name (host name). This feature is available from firmware version 3.00 onwards.

- When all switches are set to *On*, or all are set to *OFF*, change the station name via *12-08 Host Name* or via DCP command.
- In all other combinations, the address switches have priority over the parameter setting. The station name is set based on the value in *15-40 FC Type*, and a 3-digit number selected from the DIP settings.

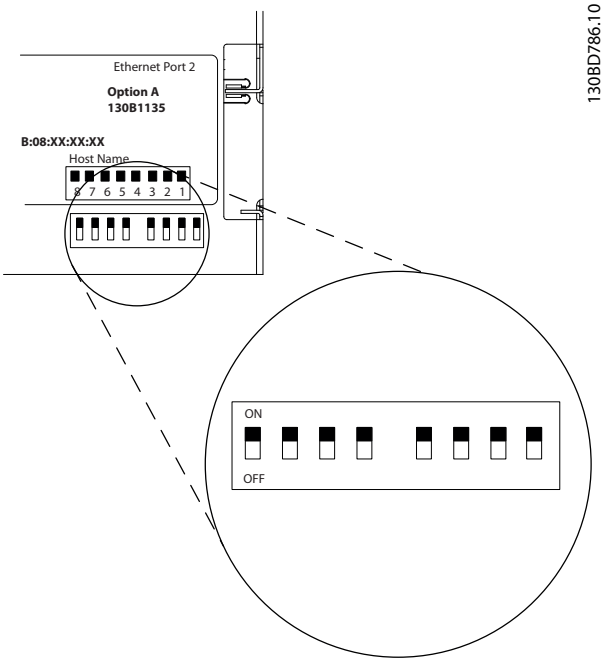

Illustration 3.9 Address Switches

Use the address switches to set the 253 different station names according to *Table 3.2*:

Switch	8	7	6	5	4	3	2	1
12-08 Host Name	+128	+64	+32	+16	+8	+4	+2	+1
FC-302-005	OFF	OFF	OFF	OFF	OFF	ON	OFF	ON
FC-302-035	OFF	OFF	ON	OFF	OFF	OFF	ON	ON
FC-302-082	OFF	ON	OFF	ON	OFF	OFF	ON	OFF
FC-302-212	ON	ON	OFF	ON	OFF	ON	OFF	OFF

Table 3.2 Host Names Setting (FC 302 used in this example)

The station name change comes into effect at the next power-up. Read the station name in *12-08 Host Name*.

 Danfoss A/S © Rev. 07/2014 All rights reserved.

3

3.8 Electrical Installation

3.8.1 Cabling Requirements

- Choose suitable media for Ethernet data transmission. CAT5e and CAT6 cables are recommended for industrial applications. Both types are available as unshielded twisted pair and shielded twisted pair.
- Screened cables are recommended for use in industrial environments and with frequency converters.
- A maximum cable length of 100 m is allowed between the switches.

3.8.2 Cable Specifications

PROFINET cables used are based electrically on category 5 balanced LAN cables according to ISO/IEC 11801 Edition 2.0, Class D.
Type C cables can be used in special applications (for example, the use of trailing cables and frequently moved machine parts), even though their design and mechanical parameters can deviate from the specifications of type A and type B cables. Still, most of the electrical parameters (for example, impedance levels) are retained.
Highly flexible copper cables generally have the finest stranded conductors and a highly resistant polyurethane outer sheath. Various outer sheath materials are permitted to meet the various demands regarding resistance of industrial environments and exterior/underground laying (natural and synthetic oil, grease, coolants/lubricants, chemicals, high and low temperatures, UV radiation, and so on).

Cable type	**Application type A**	**Application type B**	**Application type C**
Design	Data Cable	Data Cable	Data Cable
Cable installation type	Stationary, no movement after installation	Flexible, occasional movement or vibration	Special applications (for example, highly flexible, permanent movement, vibration, or torsion)
Cable marking	**PROFINET type A**	**PROFINET type B**	**PROFINET type C**
Core cross-section	AWG 22/1	AWG 22/7	AWG 22/..
Outer diameter	5.5–8.0 mm		Application dependent
Core diameter	1.5 ± 0.1 mm		Application dependent
Colour (outer sheath)	Green RAL6018		Application dependent
Core identification (colours) star quad 2 pair	White, yellow, blue, orange Pair 1: white (RXD+), blue (RXD-) Pair 2: yellow (TXD+), orange (TXT-)		
Number of cores	4		
Cable design	2 pairs or 1 star quad		
Shielding design type	Aluminium foil + Cu braiding		Application
Plug type	RJ 45 (IP20 or IP65/67)/M12		

Table 3.3 Cable Specifications for Application Types A, B and C

Relevant standard	ISO/IEC 11801 Edition 2.0, IEC 61156 (minimum Category 5)
Delay skew	≤20 ns/100 m
Transfer impedance	≤50 m Ω/m at 10 MHz

Table 3.4 Transmission Performance Requirements

 Danfoss A/S © Rev. 07/2014 All rights reserved.

3.8.3 Wiring Procedures

Wiring pocedure for enclosure types A1-A3

1. Mount the pre-configured cable wires with the connectors on the fieldbus option. For A1 and A2 enclosures, mount the supplied strain relief on top of the frequency converter with 2 screws, as shown in *Illustration 3.10*. For cable specifications, refer to *chapter 3.8.2 Cable Specifications*.
2. Position the cable between the spring loaded metal clamps, to establish mechanical fixation and electrical contact between cable and ground.

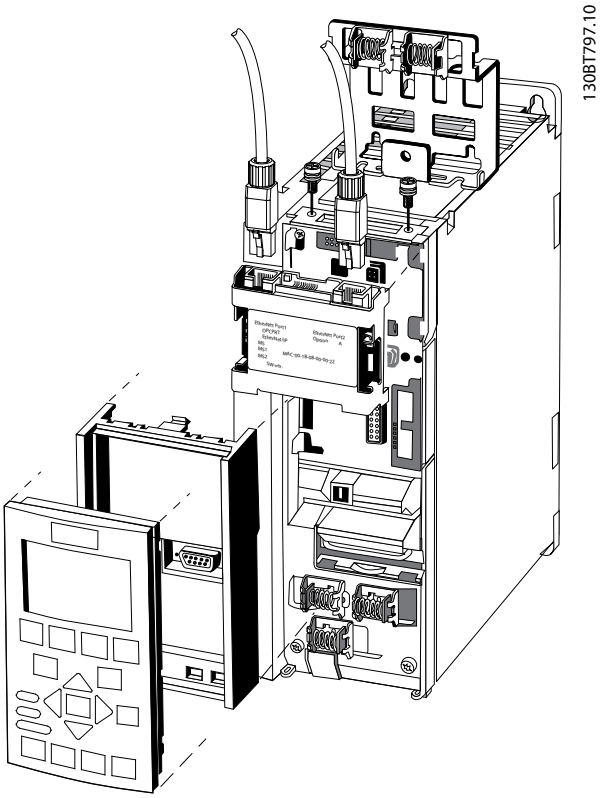

Illustration 3.10 Wiring for Enclosure Types A1-A3

Wiring procedure for enclosure types A4-A5, B1-B4, and C1-C4

1. Push the cable through the cable glands.
2. Mount the pre-configured cable wires with the connectors on the fieldbus option. For cable specifications, refer to *chapter 3.8.2 Cable Specifications*.
3. Fix the cable to the metal base plate using the springs, see *Illustration 3.11*.
4. Tighten the cable glands securely.

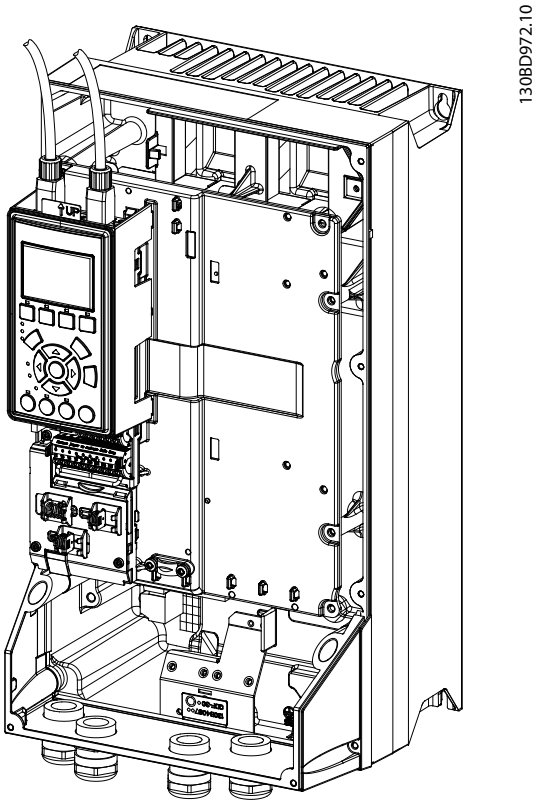

Illustration 3.11 Wiring for Enclosure Types A4-A5, B1-B4, and C1-C4

 Danfoss A/S © Rev. 07/2014 All rights reserved.

Wiring procedure for enclosure types D, E, and F

1. Mount the pre-configured cable wires with the connectors on the fieldbus option. For cable specifications, refer to *chapter 3.8.2 Cable Specifications*.
2. Fix the cable to the metal base plate using the springs, see *Illustration 3.12*.
3. Tie down the cable and route it with other control wires inside the unit, see *Illustration 3.12*.

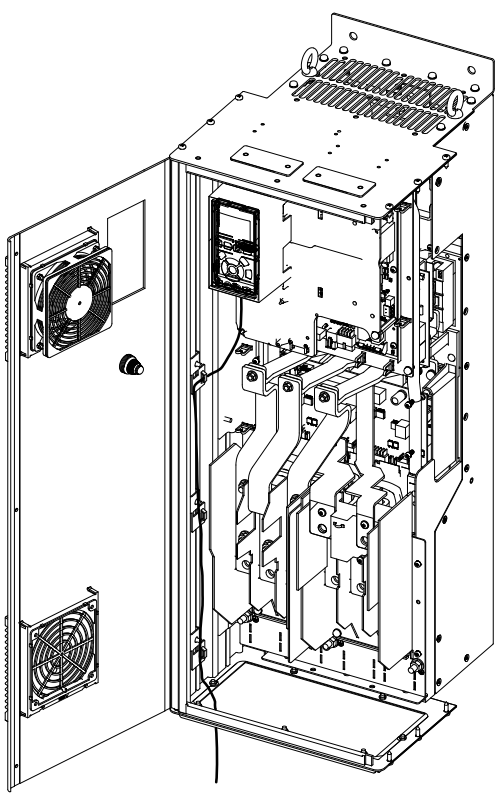

Illustration 3.12 Wiring for Enclosure Types D, E, and F

NOTICE

Do not strip the Ethernet cable. Do not ground it via the strain relief plate. Ground the screened Ethernet cables through the RJ 45 connector on the PROFINET interface.

3.9 Reassembling Cover

1. Mount the new front cover and the LCP.
2. Attach the sticker with the correct product name to the front cover.

3.10 Applying Power

Follow the instructions in the frequency converter *Operating Instructions* to commission the frequency converter. The frequency converter automatically detects the PROFINET interface and 2 new parameter groups (group 9 and group 12) appear.

3.11 Checking Network Cabling

NOTICE

After installing the PROFINET interface, be aware of the following parameter settings:
8-01 Control Site*: *[2] Control word only* or *[0] Digital and control word
8-02 Control Word Source*: *[3] Option A

 Danfoss A/S © Rev. 07/2014 All rights reserved.

4 Troubleshooting

4.1 Warnings and Alarms

NOTICE

Refer to the relevant *Operating Instructions* for an overview of warning and alarm types and the full list of warnings and alarms.

PROFINET alarm words and warning words are shown on the frequency converter display in hex format. When there is more than 1 warning or alarm, the sum of all warnings or alarms is shown. Alarm word, warning word, and PROFINET warning word can also be displayed using the serial bus in *16-90 Alarm Word*, *16-92 Warning Word*, and *9-53 Profibus Warning Word*.
For warning 165 *Baudrate search*, refer to *Table 4.1*.

Bit (hex)	Unit diagnose bit	PROFIBUS warning word (*9-53 Profibus Warning Word*)
00000001	160	Connection with DP-master is not ok
00000002	161	Unused
00000004	162	FDL (Fieldbus data link layer) is not ok
00000008	163	Clear data command received
00000010	164	Actual value is not updated
00000020	165	Baudrate search
00000040	166	PROFIBUS ASIC is not transmitting
00000080	167	Initialising of PROFIBUS is not ok
00000100	152	Drive is tripped
00000200	153	Internal CAN error
00000400	154	Wrong configuration data from PLC
00000800	155	Wrong ID sent by PLC
00001000	156	Internal error occurred
00002000	157	Not configured
00004000	158	Timeout active
00008000	159	Warning 34 active

Table 4.1 9-53 Profibus Warning Word

4.2 Troubleshooting

4.2.1 LED Status

The PROFINET interface has 3 bi-coloured LEDs that allow a fast and detailed diagnosis. Each LED is linked to its unique part of the PROFINET interface, see *Table 4.2*.

LED label	Description
MS	Module status, reflects the activity on the PROFINET stack
NS1	Network sStatus 1, reflects the activity on port 1
NS2	Network status 2, reflects the activity on port 2

Table 4.2 LED Label

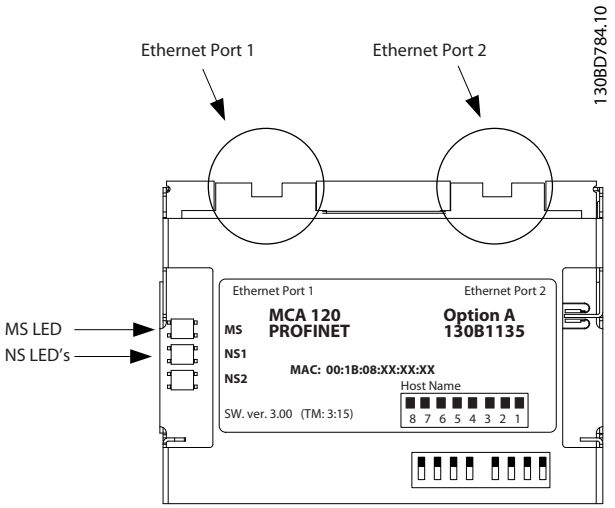

Illustration 4.1 Overview of PROFINET Interface

Module Status

Status	Tri-colour LED	
No IP address assigned	Off	
No communication to PROFINET module. Module is waiting for a configuration telegram from the controller.	Green:	
IO AR established	Green:	
Supervisor AR established, No IO AR.	Green:	
Internal error	Red:	
Wink	Yellow:	

Table 4.3 MS: Module Status

 Danfoss A/S © Rev. 07/2014 All rights reserved.

Network Status

Phases	Status	Tri-colour LED	
Power off	*No power* or *No link* on the corresponding port	Off	
Power on	IP address conflict	Red:	
	Waiting for configuration	Green:	
Running	In *Data Exchange* mode	Green:	
	Wrong configuration	Red:	
Data exchange	No increment in "In Octets" counter of corresponding port in last 60 s	Yellow:	

Table 4.4 Indication on Network Status LED

During normal operation, the MS and at least 1 NS LED shows a constant green light.

Wink command
The interface responds to a *Wink command* from the network by flashing all 3 LEDs yellow simultaneously.

4.2.2 No Communication with the Frequency Converter

When there is no communication with the frequency converter, proceed with the following checks:

Check 1: Is the cabling correct?
Check that the cable is mounted correctly. Check if the corresponding network LED shows link activity. NS1 or NS2.

Check 2: Does the hardware configuration match?
Check that the hardware configuration matches the value in *12-08 Host Name*.

Check 3: Is the correct GSD file installed?
Download the correct GSD file from *www.danfoss.com/BusinessAreas/DrivesSolutions/*.

4.2.3 Warning 34 Appears

Warning 34 is not only related to wiring.
Warning 34 appears when:

- There is no master communication for 60 s after power-up.
- The master is in stop mode.
- Master communication is not established, or is incorrectly configured.
- Wiring is incorrect.

Action:

- Check the master mode and master configuration.
- Check the wiring if the master mode and communication are correct.

 Danfoss A/S © Rev. 07/2014 All rights reserved.

Index

A

Abbreviation 3
Additional resources 2
Address switches 9
Alarm 13
Alarm word 13
Applying power 12
Approvals 0

C

Cable routing 7
Cable specifications 10
Cabling requirements 10
Certifications 0
Convention 3

D

Discharge time 4

E

Electrical installation 10
EMC interference 7
EMC-compliant installation 7
Exploded view 6

G

Grounding 7

H

High voltage 4
Host name 9

I

Intended use 2
Items supplied 2

L

Leakage current 5
LED 3
Line topology 8
Load sharing 4

M

Module status 13
Motor wiring 7
Mounting 6

N

Network cabling 12
Network status 14
No communication with frequency converter 14

Q

Qualified personnel 4

R

Redundancy manager switch 9
Ring/redundant line topology 8

S

Safety 5
Screened cable 7, 10
Star topology 8
Symbol 3

T

Topology 8

U

Unintended start 4

W

Warning 13
Warning 34 14
Warning word 13
Wink command 14
Wiring procedure 11

 Danfoss A/S © Rev. 07/2014 All rights reserved.

www.danfoss.com/drives

Danfoss can accept no responsibility for possible errors in catalogues, brochures and other printed material. Danfoss reserves the right to alter its products without notice. This also applies to products already on order provided that such alterations can be made without subsequential changes being necessary in specifications already agreed. All trademarks in this material are property of the respective companies. Danfoss and the Danfoss logotype are trademarks of Danfoss A/S. All rights reserved.

Danfoss A/S
Ulsnaes 1
DK-6300 Graasten
www.danfoss.com/drives

130R0478 MG90U402 Rev. 07/2014