DATASHEET v221

AURA+ ALCC010/12 LED DRIVER SERIES

DALI DIMMABLE CONSTANT CURRENT LED DRIVER

ALCC010-00350-042-DALI-SR
ALCC010-00700-021-DALI-SR

FEATURES

- Single channel output, output current level selectable by DIP switch
- Compact sizing with strain reliefs
- Meet DALI Protocol IEC 62386-207 Ed 2.0
- Supports Touch-DIM function
- Dimming range: 0.1-100%, dimming effect smooth, no flicker
- Protections: Short circuit, Over load, Over voltage

APPLICATION

- Suitable for indoor LED lighting application, such as down lights and spot lights

arrantlight
LIGHTING YOUR BUSINESS SINCE 1984

ARRANT-LIGHT OY
+358 2 246 2300 | INFO@LIGHT.FI
RAJAKIVENKATU 8, 20740 TURKU, FINLAND
@ARRANTLIGHTOY **WWW.LIGHT.FI**

Technical Data

Product Code		ALCC010-00350-042-DALI-SR			ALCC010-00700-021-DALI-SR		
		Current	Voltage	Power	Current	Voltage	Power
Output	DIP Switch Technical Values	120mA	9-42V	5.04W	350mA	2-21V	7.35W
		150mA	9-42V	6.30W	400mA	2-21V	8.4W
		180mA	9-42V	7.56W	450mA	2-21V	9.45W
		210mA	9-42V	8.82W	500mA	2-20V	10W
		*250mA	9-40V	10W	550mA	2-18V	9.9W
		*300mA	9-33V	9.99W	600mA	2-16V	9.6W
		320mA	9-31V	9.92W	650mA	2-15V	9.75W
		350mA	9-28V	9.8W	700mA	2-14V	9.8W
	Channel	1					
	Current Tolerance	±5%					
	Turn on delay Time	<0.5s, at 230Vac					
	Current Ripple	<3%					
Input	Voltage	220VAC-240VAC					
	Frequency	50/60Hz					
	Power Factor	>0.96@230VAC, Full load			>0.92@230VAC, Full load		
	THD (full load)	<15%@230VAC					
	AC Current Max	0.075Amax@230VAC					
	Stanby Power	<0.5W			<1W		
	Inrush Current	Cold start, 30A@230VAC					
Protections	Short Circuit	Close output, recovers automatically after fault removed					
	Over Load	When the output voltage is exceeded, the output current decreases and, recovers automatically when the load is reduced. Shut down the output, recovers automatically when temp. back to normal.					
	Over Temperature	Shut down the output, recovers automatically when temp. back to normal.					
	Dimming Type	DALI /Touch DIM (Push DIM)					
	Dimming Range	0.1%-100% Dimming to off					
Environment	IP Rating	IP20					
	Working temp. Humidity	-20°C~50°C, 20-50%RH					
	Storage Temp. Humidity	-40°C~85°C, 5-70%RH					
	Tc.	90°C					

**Tolerance: 250mA 1~7%; 300mA -6~0%;*

ARRANT-LIGHT OY
+358 2 246 2300 | INFO@LIGHT.FI
RAJAKIVENKATU 8, 20740 TURKU, FINLAND
@ARRANTLIGHTOY WWW.LIGHT.FI

Dimensions

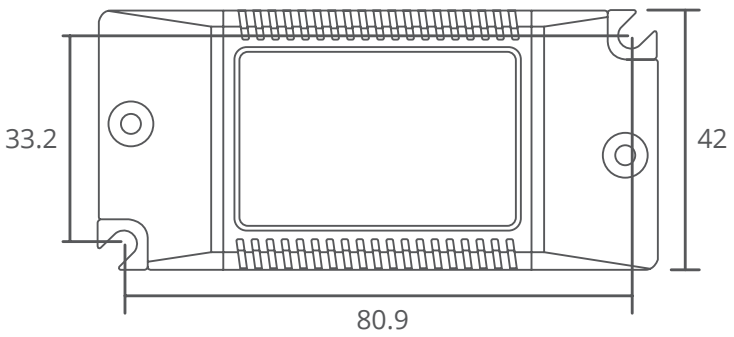

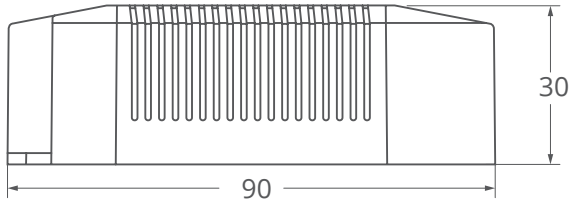

Length	90mm
Width	42mm
Height	30mm
Safety	
Surge	EN61347, GB19510
Withstand Voltage	I/P-O/P: 3750VAC/1min/10mA; I/P-E: 1875VAC/1min/10mA
DALI Standard	IEC 62386-101: 2014, IEC 62386-102: 2014; IEC 62386-207: 2009, DALI 2.0
Safety Standars	EN61347, GB19510
EMC Eission	EN55015, EN61000-3-2
EMC Immunity	EN61000-4-2,3,4,5,6,8,11; EN61547
Warranty and Lifetime	
Lifetime	50,000h@ tc:80
Switch cycle	>25,000 times
Warranty	5 years

Current Selection Table

This is a multi-current dimming driver, output current level selectable by DIP S.W., as the following:

ALCC010-00350-042-DALI-SR

ON	OFF	1 2 3							
		120mA	150mA	180mA	210mA	250mA	300mA	320mA	350mA
		9-42V	9-42V	9-42V	9-42V	9-40V	9-33V	9-31V	9-28V

Remark: Function default setting is:
120mA (@switch are all OFF state)

ALCC010-00700-021-DALI-SR

ON	OFF	1 2 3							
		350mA	400mA	450mA	500mA	550mA	600mA	650mA	700mA
		2-21V	2-21V	2-21V	2-20V	2-18V	2-16V	2-15V	2-14V

Remark: Function default setting is:
350mA (@switch are all OFF state)

ARRANT-LIGHT OY
+358 2 246 2300 | INFO@LIGHT.FI
RAJAKIVENKATU 8, 20740 TURKU, FINLAND
@ARRANTLIGHTOY **WWW.LIGHT.FI**

Dimming Curve

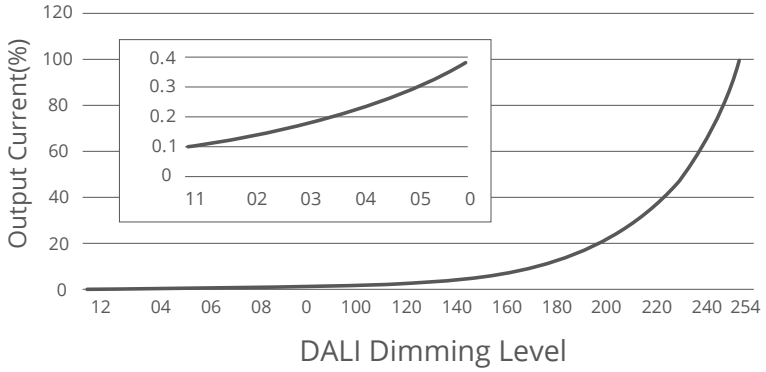

Wiring Diagram

DALI Diagram

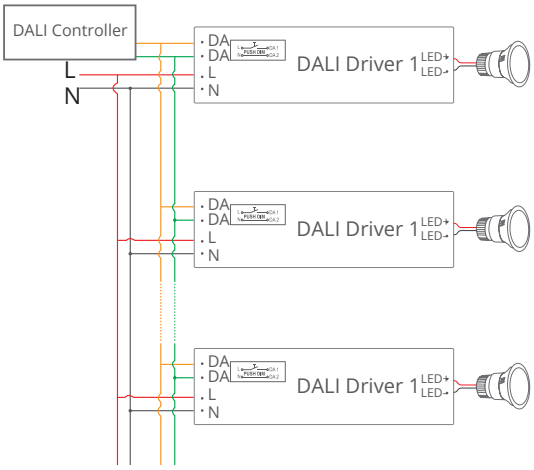

Push DIM (Touch DIM) Diagram

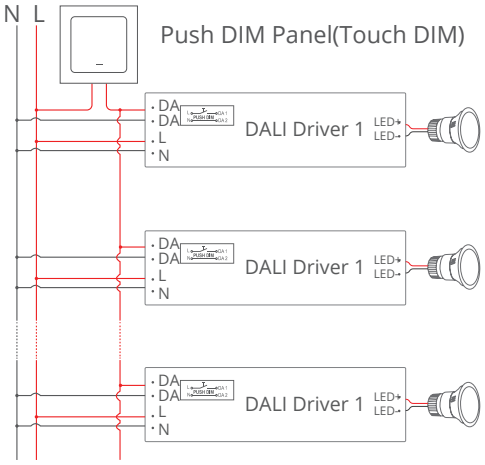

Remark: Only use open push button without indicator light. Maximum cable length between each Unit: 20 meters.

Push DIM Function

1. Press the Touch DIM (Push DIM) switch for 8s or more,the driver can be controlled via Push DIM switch.
2. Short press the Touch DIM (Push DIM) switch (<0.5s) to control the lamp on or off.
3. Long press the Touch DIM (Push DIM) switch (>0.5s) to dim the brightness of light. The dimming direction will change every time after pressing switch.
4. Double-click the Touch DIM (Push DIM) switch (<0.3s), then all lamps connected on the device will be set maximum brightness.
5. The brightness adjustment range is 1%-100%, and the light can be turned off through short pressing when doing the adjustment with long pressing Push DIM switch.
6. With the Power off memory function, the power-down state will be recovered when power on again.

ARRANT-LIGHT OY
+358 2 246 2300 | INFO@LIGHT.FI
RAJAKIVENKATU 8, 20740 TURKU, FINLAND
@ARRANTLIGHTOY **WWW.LIGHT.FI**

Cautions

1. This product should be installed by qualified personnel.
2. This product is non waterproof, need to avoid sun and rain. In case of outdoor use, please ensure it is mounted in a water proof enclosure.
3. Good heat dissipation conditions extend product life. Please install the product in a well-ventilated environment.
4. Please make sure LED power supply output voltage, current is used to meet the product requirements.
5. Please ensure that adequate sized cable is used from the controller to the LED lights to carry the current. Please also ensure that the cable is secured tightly in the connector.
6. Due to safety concerns, PVC or rubber cord of 0.75-2.5mm^2 is recommended for input and output terminal(s) (excluding signal terminals). Flat power cord is not suitable. Ensure all wire connections and polarities are correct before applying power to avoid any damages to the LED lights.
7. In case of malfunction, do not repair it yourself.

Safety Labels

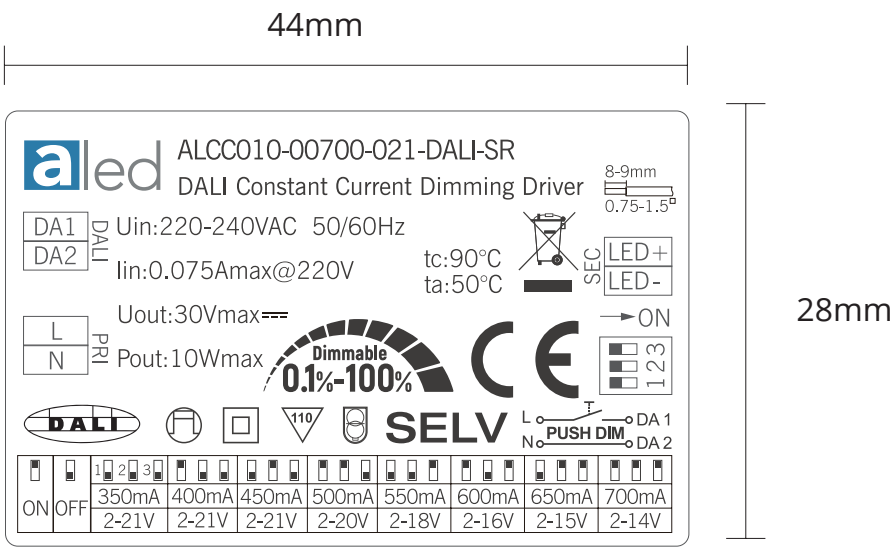

ARRANT-LIGHT OY
+358 2 246 2300 | INFO@LIGHT.FI
RAJAKIVENKATU 8, 20740 TURKU, FINLAND
@ARRANTLIGHTOY WWW.LIGHT.FI