Nordtronic

**Monteringsvejledning/ Monteringsanvisning/ Montasjeanvisning/ Installation instructions/ Installationsanleitung/ Asennusohje**

# Low Profile Large Tilt - LED Downlight

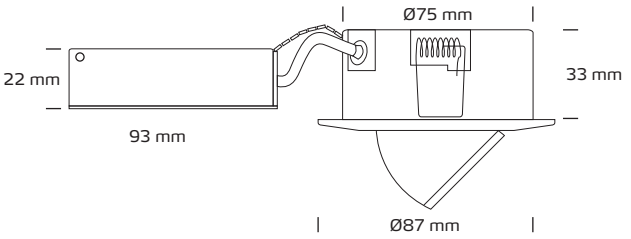


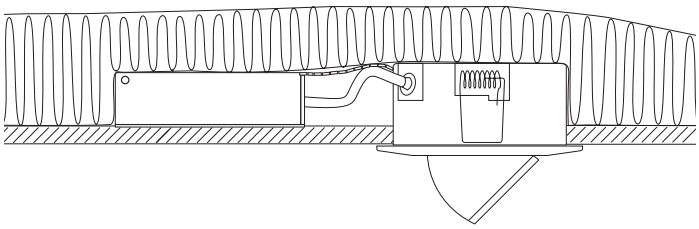

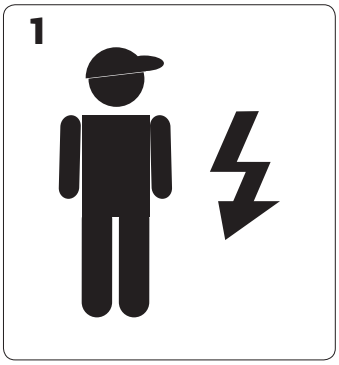


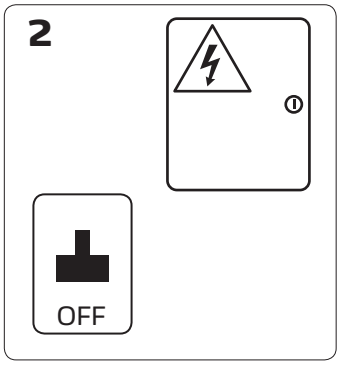

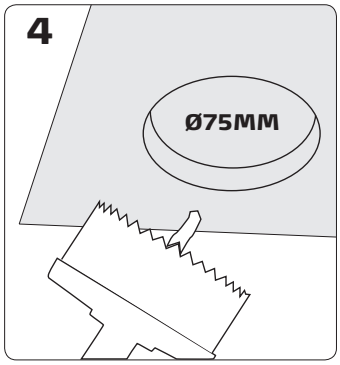


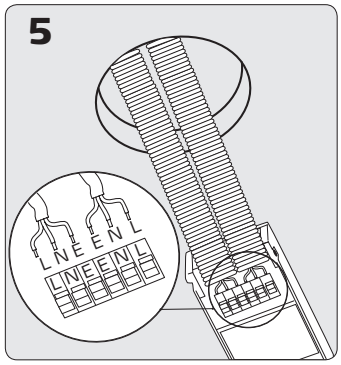


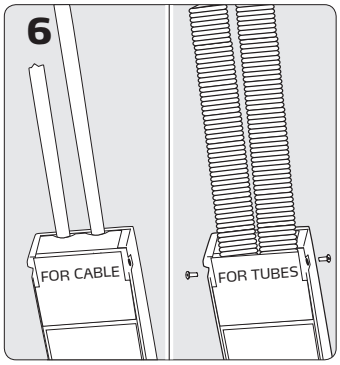


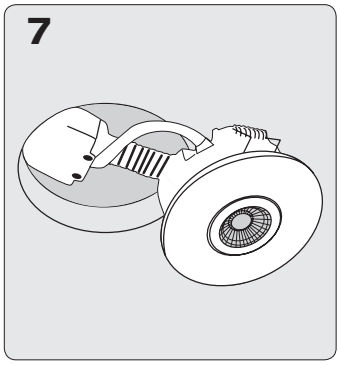


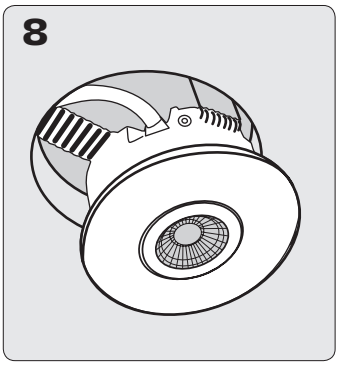


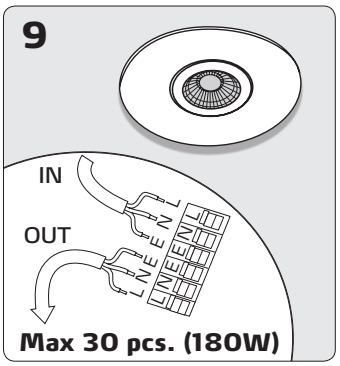


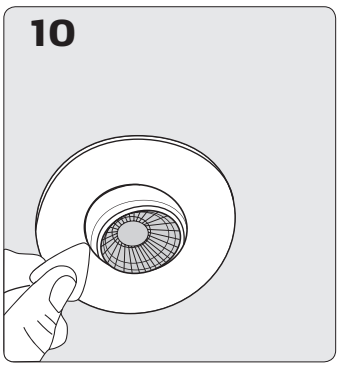


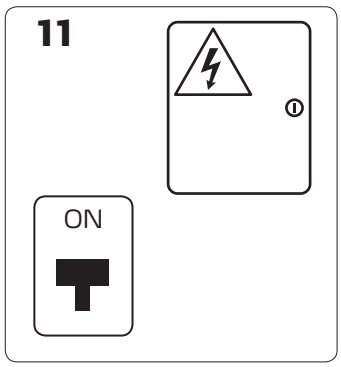


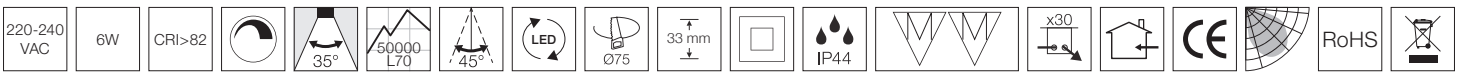


Nordtronic A/S | Flade Engvej 4 | DK - 9900 Frederikshavn | Denmark | CVR: 29808708 | Tel: +45 70209531 | www.nordtronic.com

Find the updated manual on our website - www.nordtronic.com
With reservation for typing errors

3741-3742, 3751-3752 03-2019