Ascent 150 ☐ WW

IS**1539A**

2055986 2055988 2055990 2055992 2055994 2055996

DALI

2055987 2055989 2055991 2055993 2055995 2055997

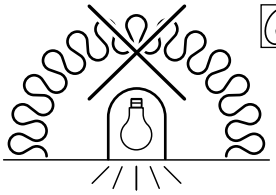

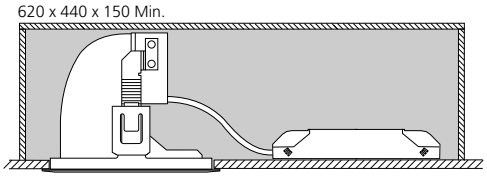

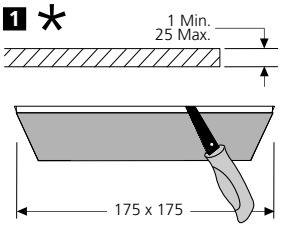

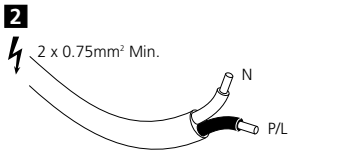

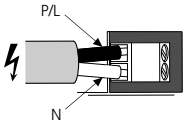

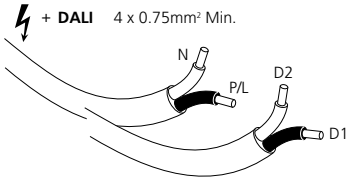

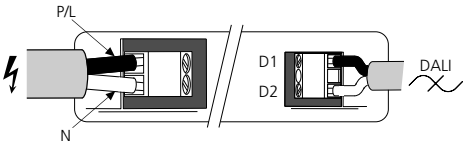

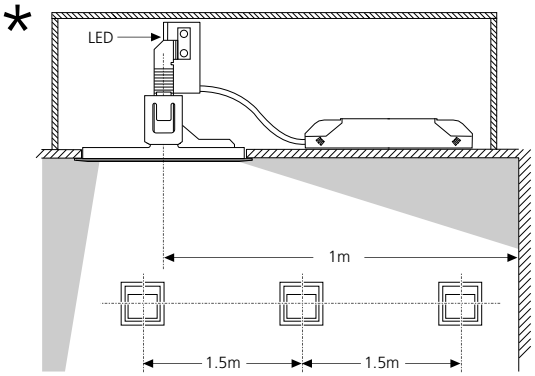

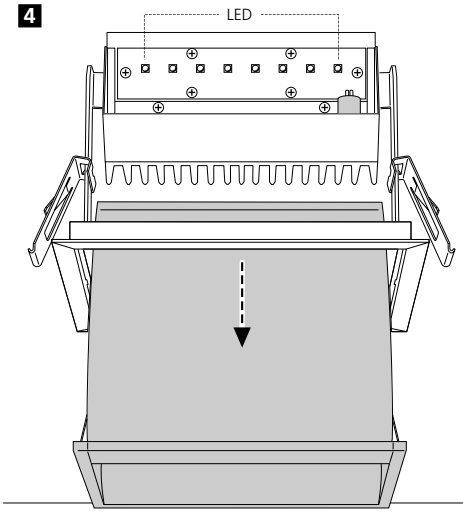

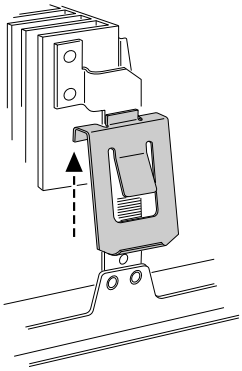

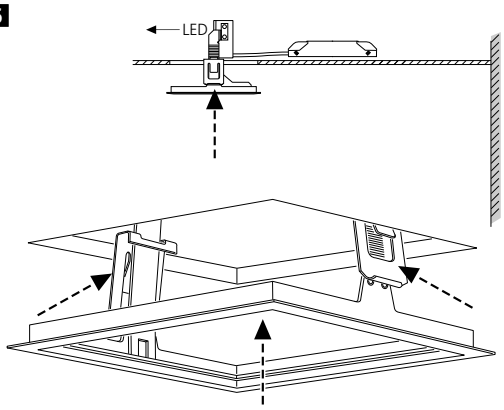

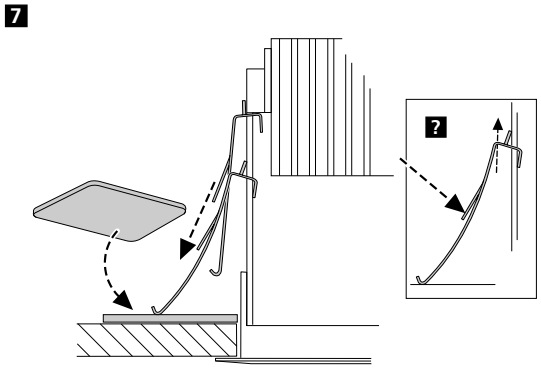

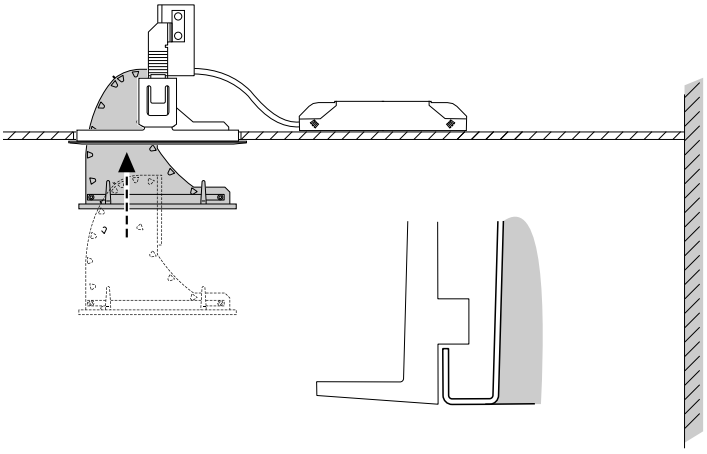

Concord

Havells Sylvania Europe LTD
Avis Way, Newhaven East Sussex BN9 OED UK
www.havells-sylvania.com

EM539002 FM01687

© Concord Lighting Limited 03.14