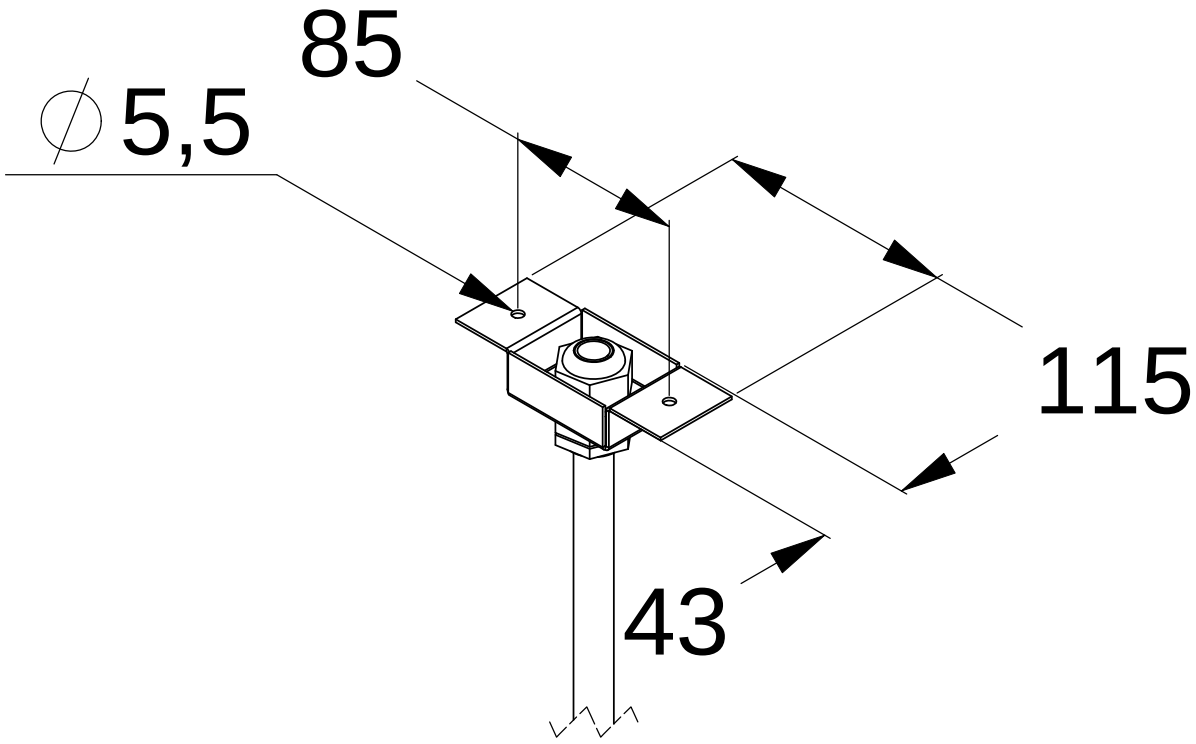
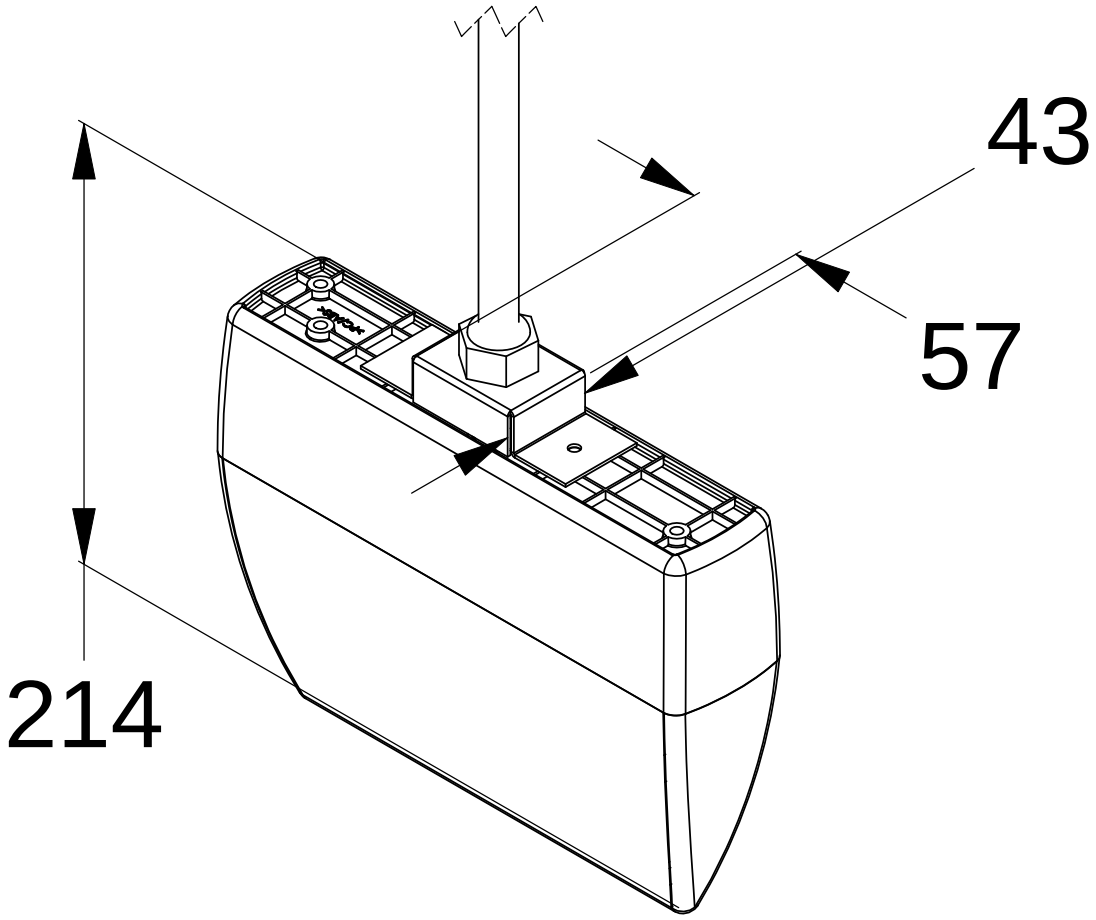
Max.
1000mm