SIEMENS

Manual

SENTRON

Power Monitoring Device

SENTRON PAC4200

Edition 05/2019

siemens.com/SENTRON

SIEMENS

SENTRON

Power Monitoring Device PAC4200

System Manual

Introduction 1

Description 2

Installation 3

Connection 4

Commissioning 5

Operation 6

Parameterizing 7

Service and maintenance 8

Technical data 9

Dimensional drawings 10

Appendix A

List of abbreviations B

05/2019

A5E02316180B-05

Legal information

Warning notice system

This manual contains notices you have to observe in order to ensure your personal safety, as well as to prevent damage to property. The notices referring to your personal safety are highlighted in the manual by a safety alert symbol, notices referring only to property damage have no safety alert symbol. These notices shown below are graded according to the degree of danger.

⚠ DANGER

indicates that death or severe personal injury **will** result if proper precautions are not taken.

⚠ WARNING

indicates that death or severe personal injury **may** result if proper precautions are not taken.

⚠ CAUTION

indicates that minor personal injury can result if proper precautions are not taken.

NOTICE

indicates that property damage can result if proper precautions are not taken.

If more than one degree of danger is present, the warning notice representing the highest degree of danger will be used. A notice warning of injury to persons with a safety alert symbol may also include a warning relating to property damage.

Qualified Personnel

The product/system described in this documentation may be operated only by **personnel qualified** for the specific task in accordance with the relevant documentation, in particular its warning notices and safety instructions. Qualified personnel are those who, based on their training and experience, are capable of identifying risks and avoiding potential hazards when working with these products/systems.

Proper use of Siemens products

Note the following:

⚠ WARNING

Siemens products may only be used for the applications described in the catalog and in the relevant technical documentation. If products and components from other manufacturers are used, these must be recommended or approved by Siemens. Proper transport, storage, installation, assembly, commissioning, operation and maintenance are required to ensure that the products operate safely and without any problems. The permissible ambient conditions must be complied with. The information in the relevant documentation must be observed.

Trademarks

All names identified by ® are registered trademarks of Siemens AG. The remaining trademarks in this publication may be trademarks whose use by third parties for their own purposes could violate the rights of the owner.

Disclaimer of Liability

We have reviewed the contents of this publication to ensure consistency with the hardware and software described. Since variance cannot be precluded entirely, we cannot guarantee full consistency. However, the information in this publication is reviewed regularly and any necessary corrections are included in subsequent editions.

Siemens AG
Smart Infrastructure
Low Voltage Products
Postfach 10 09 53
93009 REGENSBURG
GERMANY

Document order number: 3ZX1012-0KM42-3AC0
℗ 05/2019 Subject to change

Copyright © Siemens AG 2008.
All rights reserved

Table of contents

1 Introduction 7

1.1 Components of the product 7

1.2 Latest information 7

1.3 Security information 9

2 Description 11

2.1 Performance features 11

2.2 Measuring inputs 16

2.3 Measured variables 18
2.3.1 Sliding window demands 21
2.3.2 Averaging measured values (aggregation) 22
2.3.3 Other properties of measured variable representation 22

2.4 Load profile 23
2.4.1 Historical load profile 27
2.4.2 Current load profile data at the communication interfaces 28
2.4.3 Synchronization of the load profile 29
2.4.4 Additional information about the load profile data 30

2.5 Tariffs 30

2.6 Technical features of the network quality 31

2.7 Date and time 33

2.8 Limit values 34

2.9 Function of the digital inputs and outputs 35
2.9.1 Digital output 35
2.9.2 Digital input 37

2.10 Ethernet interface 38

2.11 Slots for expansion modules 39

2.12 Gateway 40

2.13 Insertion openings 42

2.14 User-definable displays 43

3 Installation 45

3.1 Introduction 45

3.2 Inserting the battery 47

3.3 Tools 48

3.4 Mounting on the switching panel 48
3.4.1 Mounting dimensions 48
3.4.2 Installation steps 49

3.5 Deinstallation ... 51

4 Connection ... 53

4.1 Safety information ... 53

4.2 Connections ... 55

4.3 Connection examples ... 58

4.4 Grounding of the Ethernet cable ... 65

5 Commissioning ... 67

5.1 Overview ... 67

5.2 Applying the supply voltage ... 68

5.3 Parameterizing the device ... 69
5.3.1 First start-up ... 69
5.3.2 Basic parameters ... 70
5.3.3 Additional settings ... 71

5.4 Applying the measuring voltage ... 71

5.5 Applying the measuring current ... 72

5.6 Checking the displayed measured values ... 72

6 Operation ... 73

6.1 Device interface ... 73
6.1.1 Displays and operator controls ... 73
6.1.2 Special display elements ... 74
6.1.3 Menu-based navigation ... 75
6.1.4 Measured value level ... 75
6.1.5 Main menu level ... 76
6.1.6 Setting level ... 76
6.1.7 Editing level ... 76
6.1.8 Control keys ... 77

6.2 Special displays ... 79
6.2.1 Phasor diagram ... 79
6.2.2 Measurement of 1st to 64th harmonics for voltage and current ... 80
6.2.3 Events ... 82

6.3 Supporting software ... 86
6.3.1 SENTRON powermanager ... 86
6.3.2 SENTRON powerconfig ... 87
6.3.3 Web server ... 87

7 Parameterizing ... 89

7.1 Introduction ... 89

7.2 Parameterizing via the user interface ... 90
7.2.1 Parameterizing via the user interface ... 90
7.2.2 Device information ... 91
7.2.3 Language/Regional ... 91
7.2.4 Basic parameters ... 91
7.2.5 Power demand ... 95
7.2.6 Date/time ... 95

7.2.7 Integrated I/Os 97
7.2.8 Communication 101
7.2.9 Display 103
7.2.10 Advanced 104

7.3 Protection against manipulation 111
7.3.1 Introduction 111
7.3.2 Password protection 112
7.3.3 Hardware write protection 114
7.3.4 Device access control (IP filter) 117
7.3.5 Configuring the Modbus TCP port 119

8 Service and maintenance 121

8.1 Calibration 121

8.2 Cleaning 121

8.3 Firmware update 122

8.4 Replacing the battery 123

8.5 Repair 126

8.6 Disposal 126

9 Technical data 127

9.1 Technical data 127

9.2 Labeling 138

10 Dimensional drawings 141

A Appendix 145

A.1 Load profile 145

A.2 Modbus 145
A.2.1 Measured variables without a time stamp with the function codes 0x03 and 0x04 146
A.2.2 Structure – Digital inputs status and digital outputs status with the function codes 0x01 and 0x02 153
A.2.3 Structure – Limit values with the function codes 0x01 and 0x02 154
A.2.4 Structure – PMD diagnostics and status with the function codes 0x03 and 0x04 155
A.2.5 Measured variables for the load profile with the function codes 0x03 and 0x04 156
A.2.6 Tariff-specific energy values in double format with the function codes 0x03, 0x04, and 0x10 159
A.2.7 Tariff-specific energy values in float format with the function codes 0x03 and 0x04 160
A.2.8 Maximum values with a time stamp and the function codes 0x03 and 0x04 161
A.2.9 Minimum values with a time stamp and the function codes 0x03 and 0x04 165
A.2.10 Odd harmonics without a time stamp with the function codes 0x03 and 0x04 168
A.2.11 Odd harmonics with a time stamp with the function codes 0x03 and 0x04 170
A.2.12 Readout of harmonic components of all harmonics with function codes 0x03, 0x04 and 0x14 172
A.2.13 Readout of averages (aggregation) with function codes 0x03, 0x04 and 0x14 175
A.2.14 Configuration settings with the function codes 0x03, 0x04, and 0x10 192
A.2.15 Value range for limit source 201
A.2.16 Communication settings with the function codes 0x03, 0x04, and 0x10 207
A.2.17 I&M settings 210
A.2.18 Commands with the function code 0x06 211

A.2.19 MODBUS standard device identification with the function code 0x2B 212
A.3 Comprehensive support from A to Z 213
B List of abbreviations 215
B.1 Abbreviations 215
Glossary 217
Index 219

Introduction 1

1.1 Components of the product

The package includes:

- 1 PAC4200 measuring device
- 1 battery
- 2 brackets for panel mounting
- 1 set of PAC4200 Operating Instructions

Available accessories

- powerconfig software
  (https://support.industry.siemens.com/cs/ww/en/view/63452759)
- powermanager software
  (https://support.industry.siemens.com/cs/ww/en/view/64850998)

1.2 Latest information

Up-to-the-minute information

You can find further support on the Internet (http://www.siemens.de/lowvoltage/technical-assistance).

Third-party software information

This product, solution or service ("Product") contains third-party software components listed in this document. These components are Open Source Software licensed under a license approved by the Open Source Initiative (https://opensource.org/), or similar licenses as determined by SIEMENS ("OSS") and/or commercial or freeware software components. With respect to the OSS components, the applicable OSS license conditions prevail over any other terms and conditions covering the Product. The OSS portions of this Product are provided royalty-free and can be used at no charge.

If SIEMENS has combined or linked certain components of the Product with/to OSS components licensed under the GNU LGPL version 2 or later as per the definition of the applicable license, and if use of the corresponding object file is not unrestricted ("LGPL Licensed Module", whereas the LGPL Licensed Module and the components that the LGPL Licensed Module is combined with or linked to is the "Combined Product"), provided the relevant LGPL license criteria are met, you are entitled to modify the Combined Product for your own use, including but not limited to the right to modify the Combined Product to relink modified versions of the LGPL Licensed Module, and you may reverse-engineer the

Combined Product, but only to debug your modifications. The modification right does not include the right to distribute such modifications and you shall maintain in confidence any information resulting from such reverse-engineering of a Combined Product.

Certain OSS licenses require SIEMENS to make source code available, for example, the GNU General Public License, the GNU Lesser General Public License and the Mozilla Public License. If such licenses are applicable and this Product is not shipped with the required source code, a copy of this source code can be obtained by anyone in receipt of this information during the period required by the applicable OSS licenses by contacting the following address:

Siemens AG Energy Management, Low Voltage & Products

Siemensstrasse 10

93055 Regensburg

Germany

Internet:

Technical Assistance (www.siemens.de/lowvoltage/support-request)

Subject: Open Source Request (please specify Product name and version, if applicable)

SIEMENS may charge a handling fee of up to 5 EUR to fulfil the request.

Warranty regarding further use of the Open Source Software

SIEMENS' warranty obligations are set forth in your agreement with SIEMENS. SIEMENS does not provide any warranty or technical support for this Product or any OSS components contained in it if they are modified or used in any manner not specified by SIEMENS. The license conditions listed below may contain disclaimers that apply between you and the respective licensor. For the avoidance of doubt, SIEMENS does not make any warranty commitment on behalf of or binding upon any third-party licensor.

1.3 Security information

Siemens provides products and solutions with industrial security functions that support the secure operation of plants, systems, machines and networks.

In order to protect plants, systems, machines and networks against cyber threats, it is necessary to implement – and continuously maintain – a holistic, state-of-the-art industrial security concept. Siemens' products and solutions constitute one element of such a concept.

Customers are responsible for preventing unauthorized access to their plants, systems, machines and networks. Such systems, machines and components should only be connected to an enterprise network or the Internet if and to the extent such a connection is necessary and only when appropriate security measures (e.g. firewalls and/or network segmentation) are in place.

For additional information on industrial security measures that may be implemented, please visit (https://www.siemens.com/industrialsecurity).

Siemens' products and solutions undergo continuous development to make them more secure. Siemens strongly recommends that product updates are applied as soon as they are available and that the latest product versions are used. Use of product versions that are no longer supported, and failure to apply the latest updates may increase customer's exposure to cyber threats.

To stay informed about product updates, subscribe to the Siemens Industrial Security RSS Feed under (https://www.siemens.com/industrialsecurity).

Note

Risk of manipulation

Several protective mechanisms can be activated in the device.

In order to reduce the risk of manipulation occurring on the device, it is recommended that the protective mechanisms available in the device are activated.

See chapter Performance features (Page 11).

General safety notes

DANGER

Hazardous voltage.

Will cause death or serious injury.

Turn off and lock out all power supplying this equipment before working on this device.

Safety-related symbols on the device

	Symbol	Meaning
(1)		Risk of electric shock
(2)		General warning symbol
(3)		Electrical installation and maintenance by qualified personnel only

See also

Applying the measuring current (Page 72)
Applying the measuring voltage (Page 71)
Applying the supply voltage (Page 68)
Replacing the battery (Page 123)
Password protection (Page 112)

Description 2

2.1 Performance features

The SENTRON PAC4200 is a measuring device for measuring the basic electrical variables in low-voltage power distribution. The device is capable of single-phase, two-phase or three-phase measurement and can be used in 2, 3 or 4-wire TN, TT and IT systems.

The SENTRON PAC42000 is designed for panel mounting. It is also possible to mount it on a standard rail using the standard rail support brackets available as an option.

Thanks to its large measuring voltage range, SENTRON PAC4200 with a wide-voltage power supply can be connected in any low-voltage system up to a rated system voltage of 690 V (max. 600 V for UL). The device version with an extra-low voltage power supply can be directly connected to systems up to 500 V. Higher voltages can be measured using voltage transformers.

Either x/1 A or x/5 A current transformers can be used for measuring current.

The large graphical display is used to read off all the measured values and to configure the device.

The integral Ethernet interface or the interface of an expansion module available as an option can be used for communication, e.g. SENTRON PAC RS485 expansion module or SENTRON PAC PROFIBUS DP expansion module or PAC SWITCHED ETHERNET module (Profinet). The functions of the device can be expanded using other expansion modules available as options. The SENTRON PAC4200 has two interfaces which can accommodate up to two external expansion modules simultaneously.

Measurement

- Measurement in 2, 3 and 4-wire systems Suitable for TN, TT and IT systems
- Measurement of all relevant electrical variables in an AC system
- Measurement of minimum and maximum values of all measured variables
- Calculation of genuine RMS values for voltage and current to the 63rd harmonic
- 4-quadrant measurement (import and export)
- Averaging of all measured values directly on the device in two steps, which are independent of each other and freely configurable (aggregation)
- Measurement of the 1st to 64th harmonics (even and odd)
- Calculation of the average voltage and current values over all phases.
- Zero blind measurement
- High measuring accuracy: for instance, accuracy class 0.2 in accordance with IEC 61557-12 for active energy This means: an accuracy of 0.2% relative to the measured value under reference conditions

- Detection of voltage dips, overvoltage and voltage interruptions with user-defined threshold values
- Measurement of N (neutral) conductor current [1)]
- Measurement of residual current and PE conductor current through external summation current transformer [1)]
- Measurement of physical variables (e.g. temperature, pressure, humidity) with external 0/4 mA to 20 mA transmitter [1)]

[1)] Using optionally available expansion module "I(N), I(DIFF), Analog" (MLFB: 7KM9200-0AD00-0AA0)
Manual 7KM PAC expansion module I(N), I(Diff), analog
(https://support.industry.siemens.com/cs/ww/en/view/109746834)

Counters and power demand

- A total of 10 energy counters capture reactive energy, apparent energy, and active energy for off-peak and on-peak, import and export.
- Energy consumption for active energy, reactive energy and apparent energy per day and tariff for 366 days.
- Two configurable universal counters for counting:
  - Limit violations
  - Status changes at the digital input
  - Status changes at the digital output
  - Pulses of a connected pulse encoder (e.g. from electricity, gas, or water meters). The pulse shape and time response must correspond to the signal shape described in the IEC 62053-31 standard.
- Operating hours counter for monitoring the operating time of a connected load. Counts only in the case of energy counting above an adjustable threshold.
- One apparent energy counter, one active energy counter, and one reactive energy counter for detecting the total energy import, regardless of the active tariff for display on the device.
- One apparent energy counter, one active energy counter, and one reactive energy counter for detecting the power consumption of a manufacturing process. The process energy counters can be started and stopped by means of the available digital inputs.
- Operating hours counter for recording the duration of a manufacturing process. The start and stop commands of the digital input that controls the process energy counter start and stop the operating hours counter. Up to 10 counters for detecting the consumption of any media via digital inputs if the optionally available SENTRON PAC 4DI/2DO expansion modules are used. Consumption (e.g. of gas, water, compressed air, electrical current) can thus be recorded using simple media counters with a pulse output.

The display texts can be freely parameterized in a user-friendly way using the SENTRON powerconfig configuration software.

Monitoring functions

The SENTRON PAC4200 monitors up to 12 limit values as well as one limit that can be formed by logically combining the other 12 limits.

Event display

- Recording up to 4096 events with a time stamp and event-specific information
- Display of events in an events list
- Reporting of events on the display
- Classifying of messages as follows:
  - Information
  - Warning
  - Alarm

Displays and controls

- LC display
- Four control keys with variable function assignment
- SENTRON powerconfig
- SENTRON powermanager
- Web server (HTTP)

Interfaces

- Ethernet
- Two multifunctional integral digital inputs
- Two multifunctional integral digital outputs
- RS 485 (if SENTRON PAC RS485 expansion module is used)
- PROFIBUS (if SENTRON PAC PROFIBUS DP expansion module is used)
- Optionally up to 8 plug-in digital inputs
- Optionally up to 4 plug-in digital outputs
- Two slots for operating optional expansion modules [1)]

[1)] The SENTRON PAC4200 supports two expansion modules. One of these may be a communication module (e.g. SENTRON PAC PROFIBUS DP or SENTRON PAC RS485).

Gateway

- Modbus gateway for integrating pure Modbus RTU slaves into an Ethernet network (Ethernet Modbus TCP ⇔ RS 485 Modbus RTU).
- Serial gateway for connecting RS 485 devices that support Modbus RTU and similar protocols.

Memory

- Adjusted device parameters are permanently stored in the device memory.
- Extreme values (maximum or minimum) are permanently stored in the internal device memory. Values can be reset via SENTRON powerconfig, Modbus command or directly on the device via the menu.
- Device-internal clock (battery buffered)
- Storage of load profiles (battery buffered)
- Storage of events (battery buffered)

Response in the case of power failure and power restore

After a power failure, the device starts back at zero with the calculation of the power demand of the total active power and total reactive power. Counter statuses and minimum/maximum values are written from the volatile to the non-volatile memory at the following intervals:

- Counter values: Every 5 minutes
- Minimum/maximum values: Every 5 seconds, if present

Tariffs

SENTRON PAC4200 supports 2 tariffs for the integrated energy counter (on-peak and off-peak).

- Control of tariff switching

  Switching between off-peak and on-peak can be controlled via the digital input or the communication interfaces.

  Time-related switching is only possible using a higher-level system.

- Tariff switching after synchronization

  When synchronizing the power demand values via the communication interfaces or the digital input, the tariff change will only become effective after expiry of the period. Without synchronization, the tariff change takes effect immediately.

  The synchronization frame contains the length of the demand period in minutes. The synchronization command is ignored if the period length sent to the device with the synchronization frame is different to the length parameterized in the device.

Security

- Password protection
- Hardware write protection
- Device access control (IP filter)
- Modbus TCP port, configurable
- Dynamic host configuration protocol (DHCP) included
- Simple Network Time protocol (SNTP) included

Using "Password protection" and "Hardware write protection", you can protect against write access to the device settings of the SENTRON PAC4200.

The protection takes effect in case of the following actions:

Modify parameters in device. Reset maximum. Reset minimum. Reset counter. Reset device.

- Modify parameters in device.
- Reset maximum.
- Reset minimum.
- Reset counter.
- Reset device.
- Reset device to factory defaults.
- Reset password.
- Update firmware on the device.

Note

Activate hardware write protection

When connecting the measuring device to a network, it is recommended that the hardware write protection is activated.

2.2 Measuring inputs

Current measurement

NOTICE
AC measurement only Use the device to measure alternating current only.

SENTRON PAC4200 is designed for:

- **Measuring current of 1 A or 5 A for connecting current transformers.** Each current measuring input can take a continuous load of 10 A.

The current direction can be changed for each phase individually. It is not necessary to change the terminal connections of the current transformers in the event of connection errors.

Voltage measurement

NOTICE
AC measurement only Use the device to measure alternating voltage only.

SENTRON PAC4200 is designed for:

- **Direct measurement on the system or using voltage transformers.** The measuring voltage inputs of the device measure direct via protective impedances. External voltage transformers are required to measure higher voltages than the permissible rated input voltages.
- **Measuring voltage up to 400 V/690 V (max. 347 V/600 V for UL) on devices with a wide-voltage power supply.** The device is designed for measuring input voltages up to 400 V (347 V for UL) phase-to-neutral and 690 V (600 V for UL) phase-to-phase.
- **Measuring voltage up to 289 V/500 V for devices with an extra-low voltage power supply**. The device is designed for measuring input voltages up to 289 V phase-to-neutral and 500 V phase-to-phase.

Connection types

Five connection types have been provided for connecting two-wire, three-wire or four-wire systems with balanced or unbalanced load.

Table 2- 1 Available connection types

Short code	Connection type
3P4W	3 phases, 4 conductors, unbalanced load
3P3W	3 phases, 3 conductors, unbalanced load
3P4WB	3 phases, 4 conductors, balanced load
3P3WB	3 phases, 3 conductors, balanced load
1P2W	Single-phase AC

The input circuit of the device must correspond to one of the connection types listed. Select the suitable connection type for the purpose.

Connection examples can be found in the chapter titled: Connection (Page 53)

NOTICE
Material damage due to incorrect system connection Before connecting SENTRON PAC4200, you must ensure that the local power supply conditions match the specifications on the rating plate.

The short code of the connection type must be entered in the device settings at startup. You can find the instructions for parameterizing the connection type in chapter Commissioning (Page 67).

2.3 Measured variables

The total set of representable measured variables is restricted by the method of connecting the device. The availability of the measured variables depends on the type of readout.

A measured variable that cannot be indicated due to the connection method is shown on the display by means of a broken line "----".

The table below shows which measured variables can be displayed with each connection type.

Measured variable	Connection type				
	3P4W	3P3W	3P4WB	3P3WB	1P2W
Voltage L1-N	✓	-	✓	-	✓
Voltage L2-N	✓	-	-	-	-
Voltage L3-N	✓	-	-	-	-
3-phase average voltage L-N	✓	-	-	-	-
Voltage L1-L2	✓	✓	-	✓	-
Voltage L2-L3	✓	✓	-	✓	-
Voltage L3-L1	✓	✓	-	✓	-
3-phase average voltage L-L	✓	✓	-	✓	-
Current L1	✓	✓	✓	✓	✓
Current L2	✓	✓	-	-	-
Current L3	✓	✓	-	-	-
3-phase average current	✓	✓	-	-	-
Neutral current	✓	-	-	-	-
Apparent power L1	✓	-	-	-	-
Apparent power L2	✓	-	-	-	-
Apparent power L3	✓	-	-	-	-
Active power L1	✓	-	-	-	-
Active power L2	✓	-	-	-	-
Active power L3	✓	-	-	-	-
Total reactive power L1 (Q_{tot}) [1)]	✓	-	-	-	-
Total reactive power L2 (Q_{tot}) [1)]	✓	-	-	-	-
Total reactive power L3 (Q_{tot}) [1)]	✓	-	-	-	-
Reactive power L1 (Q_1) [1)]	✓	-	-	-	-
Reactive power L2 (Q_1) [1)]	✓	-	-	-	-
Reactive power L3 (Q_1) [1)]	✓	-	-	-	-
Reactive power L1 (Q_n) [1)]	✓	-	-	-	-
Reactive power L2 (Q_n) [1)]	✓	-	-	-	-
Reactive power L3 (Q_n) [1)]	✓	-	-	-	-
Total apparent power over all phases	✓	✓	✓	✓	✓
Total active power over all phases	✓	✓	✓	✓	✓
Total reactive power (Q_{tot}) of all phases [1)]	✓	✓	✓	✓	✓
Total reactive power (Q_1) of all phases [1)]	✓	✓	✓	✓	✓
Total reactive power (Q_n) of all phases [1)]	✓	✓	✓	✓	✓

Measured variable	Connection type				
	3P4W	3P3W	3P4WB	3P3WB	1P2W
Cos φ L1	✓	-	✓	✓	✓
Cos φ L2	✓	-	-	-	-
Cos φ L3	✓	-	-	-	-
Power factor L1	✓	-	-	-	-
Power factor L2	✓	-	-	-	-
Power factor L3	✓	-	-	-	-
Total power factor	✓	✓	✓	✓	✓
Line frequency	✓	✓	✓	✓	✓
Displacement angle L1	✓	-	✓	✓	✓
Displacement angle L2	✓	-	-	-	-
Displacement angle L3	✓	-	-	-	-
Phase angle L1-L1	✓	✓	-	✓	-
Phase angle L1-L2	✓	✓	-	✓	-
Phase angle L1-L3	✓	✓	-	✓	-
THD voltage L1	✓	-	✓	-	✓
THD voltage L2	✓	-	-	-	-
THD voltage L3	✓	-	-	-	-
THD voltage L1-L2	✓	✓	-	✓	-
THD voltage L2-L3	✓	✓	-	✓	-
THD voltage L3-L1	✓	✓	-	✓	-
THD current L1	✓	✓	✓	✓	✓
THD current L2	✓	✓	-	-	-
THD current L3	✓	✓	-	-	-
Apparent energy	✓	✓	✓	✓	✓
Active energy import / export	✓	✓	✓	✓	✓
Reactive energy import / export	✓	✓	✓	✓	✓
Unbalance Voltage	✓	-	-	-	-
Unbalance Current	✓	✓	-	-	-
Amplitude Unbalance Voltage	✓	-	-	-	-
Amplitude Unbalance Current	✓	✓	-	-	-
Distortion current L1	✓	✓	✓	✓	✓
Distortion current L2	✓	✓	-	-	-
Distortion current L3	✓	✓	-	-	-
Harmonic content of the 1st, 2nd, 3rd, ... 64th harmonics for the L1-N voltage referred to the fundamental	✓	-	✓	-	✓
Harmonic content of the 1st, 2nd, 3rd, ... 64th harmonics for the L2-N voltage referred to the fundamental	✓	-	-	-	-
Harmonic content of the 1st, 2nd, 3rd, ... 64th harmonics for the L3-N voltage referred to the fundamental	✓	-	-	-	-
Harmonic content of the 1st, 2nd, 3rd, ... 64th harmonics for the L1-L2 voltage referred to the fundamental	✓	✓	-	✓	-

Measured variable	Connection type				
	3P4W	3P3W	3P4WB	3P3WB	1P2W
Harmonic content of the 1st, 2nd, 3rd, ... 64th harmonics for the L2-L3 voltage referred to the fundamental	✓	✓	-	✓	-
Harmonic content of the 1st, 2nd, 3rd, ... 64th harmonics for the L3-L1 voltage referred to the fundamental	✓	✓	-	✓	-
Current of the fundamental and current of the 1st, 2nd, 3rd, ... 64th harmonic in L1	✓	✓	✓	✓	✓
Current of the fundamental and current of the 1st, 2nd, 3rd, ... 64th harmonic in L2	✓	✓	-	-	-
Current of the fundamental and current of the 1st, 2nd, 3rd, ... 64th harmonic in L3	✓	✓	-	-	-
Universal counter	✓	✓	✓	✓	✓
Operating hours counter	✓	✓	✓	✓	✓
Process operating hours counter	✓	✓	✓	✓	✓
Process apparent energy	✓	✓	✓	✓	✓
Process apparent energy, previous measurement	✓	✓	✓	✓	✓
Process active energy import	✓	✓	✓	✓	✓
Process active energy import, previous measurement	✓	✓	✓	✓	✓
Process reactive energy import	✓	✓	✓	✓	✓
Process reactive energy import, previous measurement	✓	✓	✓	✓	✓

1) The reactive power type Q_1, Q_{tot} or Q_n that appears on the display is set using the configuration software. All three reactive power types can be called via the interface.

2.3.1 Sliding window demands

The sliding window demand value is the arithmetic mean of all measured values that occur within a configurable averaging time. "Sliding" means that the interval for the demand calculation is continuously shifted as a function of time.

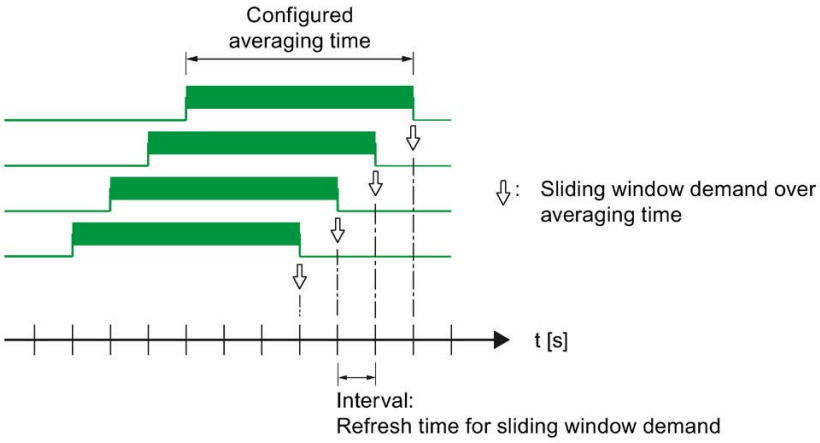

Figure 2-1 Sliding window demand

SENTRON PAC4200 supplies sliding window demand values for a large number of measured variables:

- Per phase or as a total value over all phases
- With the maximum and minimum values, and the time stamp of the extreme value

The sliding window demand values are represented on the display and can be called via the communication interfaces.

The averaging time can be parameterized on the display or via the communication interface.

The following can be set: 3, 5, 10, 30, 60, 300, 600, 900 seconds.

Representation on the display

A stroke (bar) above the phase designation (L1, L2, L3 or a, b, c) indicates that the displayed value is a sliding window demand value.

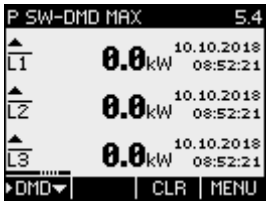

Figure 2-2 Maximum sliding window demand of the active power

2.3.2 Averaging measured values (aggregation)

Based on selected recordings of measured values over time, the user can optimize the system in accordance with requirements, e.g. with respect to energy consumption.

For this purpose, instantaneous measured values would need to be read out via the communication interface and stored. Uninterrupted recording requires a high bandwidth, high availability of communication and high storage capacity. The SENTRON PAC4200 provides two internal average value generators which can be parameterized independently of each other. The time averages formed in the device are generated continuously based on all the associated instantaneous values.

This aggregation of measured values reduces the data volume and consequently the danger of losing information due to limited communication availability and bandwidth.

The values are updated at time-synchronized, parameterizable intervals:

- A default period length of 10 seconds is set for the measured values of average 1 (file 1).
- A default period length of 15 seconds is set for the measured values of average 2 (file 2).
- Harmonic average (file 3)

The aggregation intervals can be set to anything between 3 seconds and 31536000 seconds (1 year).

The function is only available via the communication protocols Modbus TCP and Modbus RTU.

The list of available measured values can be found in the appendix Readout of averages (aggregation) with function codes 0x03, 0x04 and 0x14 (Page 175).

2.3.3 Other properties of measured variable representation

Zero point suppression level

The zero point suppression level can be set via the interface in 1% steps in the range from 0% to 10% of the primary rated current of the external current transformer (default value 0.0%). Currents within this range are indicated on the display with "0" (zero).

2.4 Load profile

The load profile records the time history of the electric power and thus documents the distribution of power fluctuations and peaks.

SENTRON PAC4200 supports load profile recording according to the "fixed block" or "rolling block" method. With both methods, the load profile is stored in the device and made available at the communication interfaces.

SENTRON PAC4200 interprets synchronization signals which occur at irregular intervals. Any deviations from the set times are documented in the load profile.

Note

Data access via the software

Current and historical load profile data can only be accessed via the communication interfaces. For more information, please see the related documentation.

Configuring load profile recording

You can adapt load profile recording using the configuration software or on the display of the device. The following parameters influence the recording:

- Length of the demand period or subperiod
- Number of subperiods per demand period. This number defines the method for recording the load profile ("fixed block" or "rolling block")
- Type of synchronization

You can also set the following parameter with the configuration software:

- Type of reactive power Q_{tot}, Q_1, or Q_n

The Q_1 and Q_{tot} options that can be set using powerconfig correspond to the reactive power values shown in the power tetrahedron:

Q_1 = Displacement reactive power over fundamental U_1

Q_{tot} = Total reactive power

Q_n cannot be displayed graphically here and can be explained as follows:

Q_n = Displacement reactive power over fundamental U_1 + harmonic components U_v.

As the fundamental component of the voltage is usually high in practice, the following applies: $Q_n \approx Q_1$

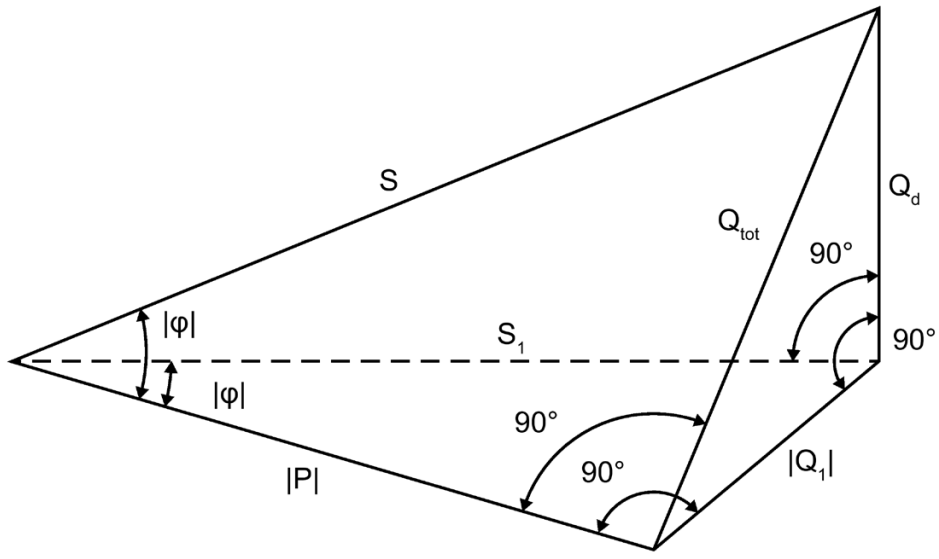

Figure 2-3 Power tetrahedron

Q1 should generally be used as the preferred setting, as reactive-power compensation systems primarily refer to cos φ, which is directly related to this.

Mathematical relations

$$Q_1 = U_1 * I_1 * \sin \varphi_1$$

$$Q_n = Q_1 + \sum_{v=2}^{\infty} (U_v * I_v * \sin \varphi_v) = \sum_{v=1}^{\infty} (U_v * I_v * \sin \varphi_v)$$

$$Q_d = \sqrt{S^2 - P^2 - Q_n^2}$$

$$Q_{tot} = \sqrt{Q_1^2 + Q_d^2}$$

Figure 2-4 Mathematical relations

You can find more information about parameterization on the device display in the chapter Power demand (Page 95).

Changing the configuration during operation: Changing the period length or the number of subperiods has a direct impact on load profile recording. The device stops the current recording and clears all data in the load profile memory. Changing the configuration has no effect on the device counter. The device is not reset.

Load profile recording methods

SENTRON PAC4200 supports the following load profile recording methods:

- Fixed block
- Rolling block

The default setting is the fixed block method with a demand period length of 15 minutes.

Fixed block method

The load profile data is calculated and stored at the end of each demand period.

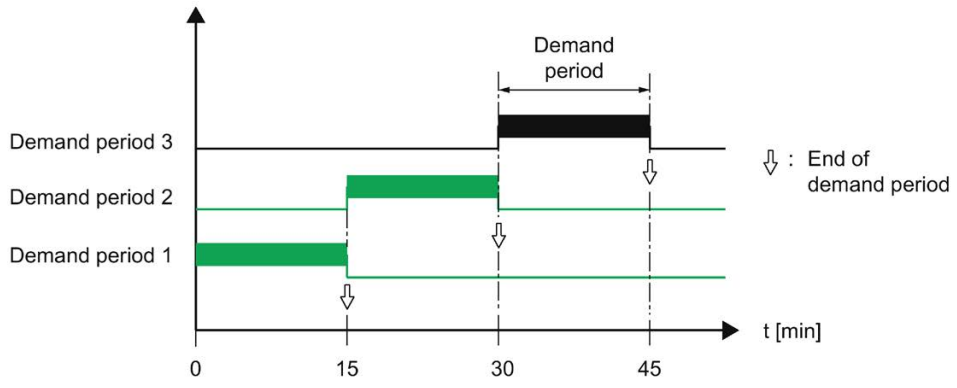

Figure 2-5 Load profile, fixed block method

Rolling block method

The rolling block method divides the demand period into subperiods. The load profile data is calculated and stored at the end of each demand period or subperiod.

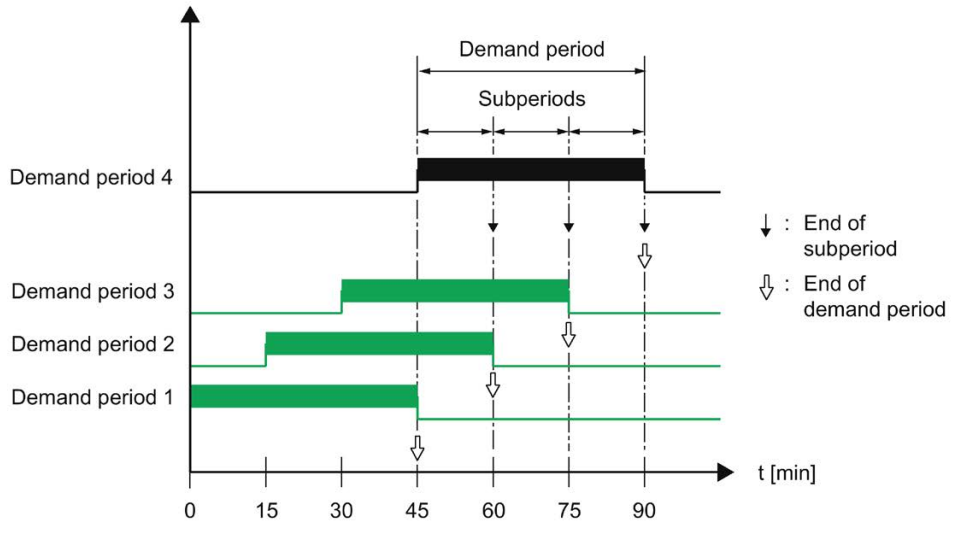

Figure 2-6 Load profile, rolling block method

Parameterizing the fixed block and rolling block methods

SENTRON PAC4200 supports the fixed block method as a special case of the rolling block method. The most important distinguishing feature is the number of subperiods.

Number of subperiods:

The demand period can be divided into a maximum of five subperiods.

- The number "1" defines the fixed block method. In this case, the length of the subperiod is identical to the length of the demand period.
- The numbers "2" to "5" define the rolling block method.

Length of the subperiods:

The length of a subperiod is an integer part of a full hour. The device allows the following lengths in minutes:

1, 2, 3, 4, 5, 6, 10, 12, 15, 20, 30, 60 min

Length of demand period:

The length of the demand period cannot be directly configured. It is defined as the product of the length of a subperiod and the number of subperiods.

$$\text{Length}_{\text{demand_period}} = n \cdot \text{length}_{\text{subperiod}};\ n = \text{number of subperiods}$$

Calculation of the power demand and the cumulated power

Arithmetic power demand:

Arithmetic calculation of the power demand referred to the actual length of the demand period. The arithmetic power demand in the instantaneous period remains constant providing the power is constant.

Cumulated power:

Cumulative calculation of the power referred to the configured length of the subperiod. The cumulated power in the instantaneous period increases linearly providing the power is constant.

The energy can be calculated from the cumulated power as follows:

$$\text{Energy} = (\text{cumulated power}) \cdot (\text{configured period length})$$

2.4.1 Historical load profile

Measured variables recorded

SENTRON PAC4200 records the following measured variables:

Table 2- 2 Historical load profile

Measured variable	Cumulated power	Power demand	Minimum instantaneous value	Maximum instantaneous value
Active power import	X	X	±X	±X
Active power export	X	X		
Reactive power import	X	X	±X	±X
Reactive power export	X	X		
Apparent power	X	X	X	X

The total power factor import and the total power factor export can be read out via the interface in addition to the measured variables indicated in the table.

The values are recorded per demand period or subperiod:

- Fixed block method

  All values are recorded per demand period.

- Rolling block method

  Arithmetic power demand values are recorded per demand period.

  Cumulated power demand values and maximum / minimum values are recorded per subperiod.

Accessing the load profile memory

- The complete load profile memory can be read out.
- A definable number of periods can be read out starting at a definable period number.
- The complete load profile memory can be cleared.

Storage concept of the load profile memory

The memory of SENTRON PAC4200 is designed as a circular buffer. If the maximum available memory is exceeded, the data which has been stored the longest is overwritten by the newest data.

Storage capacity of the load profile memory

The data volume that occurs when a load profile is recorded depends on the length of the period.

SENTRON PAC4200 can record load profile data for the following configuration over a period of 40 days:

- Fixed block:

  Length of demand period: 15 minutes
- Rolling block:

  Length of the subperiods: 15 minutes

This corresponds to a maximum of 3840 recorded periods.

This calculation applies to the ideal case in which the actual period length is identical to the configured length for all periods over the complete load profile recording time. Any deviations between the actual and configured period lengths additionally increase the data volume.

2.4.2 Current load profile data at the communication interfaces

Current load profile data

SENTRON PAC4200 supplies the load profile data for the current and instantaneous periods at the communication interfaces.

- The actual period is the last completed period.
- The instantaneous period is the period still in progress and has not yet been completed.

You can find more information on accessing the data via Modbus in the Appendix.

See also

Measured variables for the load profile with the function codes 0x03 and 0x04 (Page 156)

2.4.3 Synchronization of the load profile

The device expects the synchronization pulse at the start of the period.

The synchronization can be initiated by several means:

- By a synchronization pulse at the digital input
- By a synchronization command via the communication interface
- By the internal clock of the device

Handling of irregular, external synchronization pulses

SENTRON PAC4200 checks whether the external synchronization pulse is received at the set time, too soon, too late, or not at all. If the deviation from the set time exceeds a defined tolerance, this results in a shorter period.

If the complete time frame for received pulses is offset, SENTRON PAC4200 automatically adapts to the new time frame.

Synchronization via the communication interface

The synchronization frame contains the length of the subperiod in minutes. The synchronization command is ignored if the period length sent to the device with the synchronization frame is different to the length parameterized in the device.

Synchronization via the internal clock

The length of the subperiod, and thus also the demand period, is determined solely by the internal clock.

A subperiod starts on the full hour plus a multiple of the configured subperiod length.

Correction of the time during the current demand period or beyond the end of the demand period results in shorter demand periods. SENTRON PAC4200 marks these periods with the valuation indicator "resynchronized".

It does not record any substitute values for the gaps that are created in the time history.

Response to powering up

All load profiles that have already been recorded remain unchanged.

SENTRON PAC4200 resets the internal clock if it detects load profiles with a date in the future or a time in the past on powering up.

Impact of a tariff change on the load profile

Tariff changes between off-peak and on-peak have an impact on the load profile because all values stored in the profile are uniquely assigned to the applicable tariff.

The last tariff remains valid until the end of the instantaneous period. The new tariff takes effect at the start of the next period. The energy counters of SENTRON PAC4200 are switched to the other tariff at the end of the instantaneous demand period.

Impact of a measuring voltage failure

A failure of the measuring voltage has no effect on the load profile.

Impact of a supply voltage failure

The device records shorter periods when the supply voltage fails and when it is restored.

It does not record any substitute values for the duration of the power failure.

2.4.4 Additional information about the load profile data

SENTRON PAC4200 records the following additional information for each period:

- **"Resynchronized"**

  The period was prematurely ended by the device due to a synchronization irregularity. This identifier is set as long as the time is undefined. The time can be undefined if the internal clock could not be backed up by the battery, e.g. because the battery is discharged.

- **"Supply voltage failed"**

  The period was prematurely ended due to failure of the supply voltage.

- **"Unreliable"**

  The load profile data is unreliable.

  – The measuring current or the measuring voltage is outside the specified range.

  – The reactive power type has changed.

The additional information is stored together with the other load profile data and can be called via the communication interface.

See also

Load profile (Page 145)

2.5 Tariffs

SENTRON PAC4200 supports two tariffs for the integrated energy counters (on-peak and off-peak).

A tariff change between off-peak and on-peak can be requested by means of a digital input or via the communication interfaces.

Time-related switching is only possible using a higher-level system.

The last tariff remains valid until the end of the instantaneous period. The new tariff takes effect at the start of the next period. The energy counters of SENTRON PAC4200 are switched to the other tariff at the end of the instantaneous demand period.

Without synchronization, the tariff change takes effect immediately.

2.6 Technical features of the network quality

The SENTRON PAC4200 supplies the following measured variables for evaluating network quality:

1. Harmonics up to the 64th harmonic
2. THD for voltage and current:
3. Displacement angle φ
4. Cosine of the displacement angle φ
5. Phase angle U
6. Unbalance voltage and unbalance current
7. Voltage dips, voltage swells and interruptions

Measurement of 1st to 64th harmonics for voltage and current

Harmonics are mainly caused by equipment with a non-linear characteristic, such as fluorescent lamps, transformers and frequency converters. They are integer multiples of a fundamental.

The SENTRON PAC4200 can calculate odd (3rd to 63rd) or all (1st to 64th) integer voltage and current harmonics and display them as a bar diagram on the display.

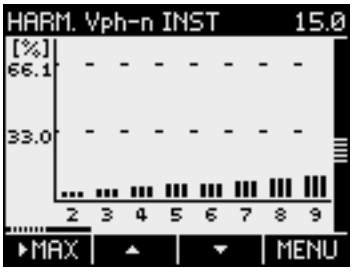

Harmonics
Voltage 1 L-N

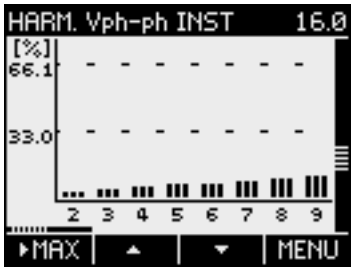

Harmonics
Voltage 2 L-L

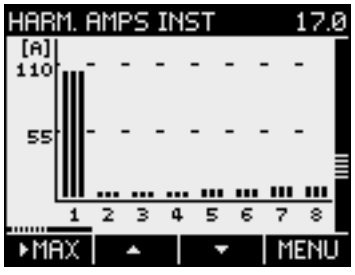

Harmonics
Voltage 3 current

It is also possible to read out the data using a Modbus command.

The Modbus table can be found in chapter Readout of harmonic components of all harmonics with function codes 0x03, 0x04 and 0x14 (Page 172).

Harmonics referred to the root-mean-square value

The fundamental of the voltage is specified in volts (V) rather than percent (%). The harmonics of the voltage referred to the root-mean-square value (r.m.s.) can be calculated from this information in the software.

THD

The THD (total harmonic distortion) is used to describe the distortion of the electrical signal. It indicates the ratio of the harmonic content to the fundamental in percent.

SENTRON PAC4200 measures the THD of the voltage and the THD of the current referred to the fundamental. The instantaneous value, the maximum value and the time stamp of the maximum value are supplied.

The values are calculated in accordance with standard IEC 61557-12: 2007. Harmonics up to the 64th harmonic are taken into account.

Displacement angle φ

The angle φ (phi) describes the displacement angle between the fundamentals of voltage and current.

SENTRON PAC4200 supplies the instantaneous value of the displacement angle φ, the maximum and minimum values, and the time stamps of the maximum and minimum values for each phase.

The values can be read out via the communication interfaces.

Cosine phi

Cos φ is the cosine of the displacement angle φ of the fundamentals for voltage and current. The possible values of cos φ are between -1 and 1.

SENTRON PAC4200 supplies the instantaneous value of cos φ, the maximum and minimum values, and the time stamps of the maximum and minimum time values for each phase.

The values can be read out via the communication interfaces.

An inductive cos φ is marked by a coil symbol in front of the measured value and a capacitive cos φ by a capacitor symbol.

Phase angle U

SENTRON PAC4200 supplies the instantaneous values, the maximum and minimum values, and the time stamps of the maximum and minimum time values for the phase angles L1-L1, L1-L2 and L1-L3.

The values can be called via the communication interfaces.

Unbalance

A three-phase system is referred to as balanced if the three phase-to-phase voltages and phase-to-phase currents have an identical amplitude and are offset 120° from each other.

SENTRON PAC4200 calculates the unbalance for voltage and current according to the EN 61000-4-27:2000 standard.

Voltage dips/voltage swells/voltage interruptions

The specifications refer to the nominal measuring voltage (L-N) in accordance with IEC 61000-4-30. In a 3-wire system, the specification refers to measuring voltage (L-L).

Threshold violations, which can be defined by the user, are entered in the event list as events.

2.7 Date and time

UTC time and local time

The internal clock of SENTRON PAC4200 measures UTC time. All information about the date and time (time stamp) that can be called at the communication interfaces must be interpreted as UTC time.

The SENTRON PAC4200 display indicates the configured local time corresponding to the time difference due to time zones and daylight saving time.

UTC time: Universal Time Coordinated (UTC) is the international reference time.

Time zone: Geographical areas with the same positive or negative deviation from UTC time are grouped together in time zones.

Local time: Local time is UTC time plus or minus the time difference due to the time zone plus or minus the time difference due to the locally applicable daylight saving time.

Example: 3.36 p.m. CEST (local time in Germany) on September 10, 2008 corresponds to 1.36 p.m. (UTC time) on September 10, 2008. Germany is located in the UTC+1 time zone. Daylight saving time applies on the above-mentioned date, so the local time is shifted by one hour ("+1").

Synchronization of clock time

The internal clock of the SENTRON PAC4200 can be synchronized with an external time, e.g. using the "Top of minute" pulse, or by means of a synchronization command via the available communication interfaces, or automatically via SNTP (Simple Network Time Protocol).

You can find more information in chapter Ethernet interface (Page 38).

Synchronization is relevant for all measured variables where the time of occurrence is also captured, e.g. for recording the load profile.

2.8 Limit values

SENTRON PAC4200 monitors up to 12 limit values as well as one limit that can be formed by logically combining the other 12 limits.

Definition of the limit values

The number of limit values to be monitored is selectable. The following must be specified for each of the maximum of 12 limit values:

- Limit value monitoring ON/OFF
- Monitored measured variable
- Threshold
- Upper or lower limit violated
- Time delay
- Hysteresis

Combination of the limit values

The limit value formed by the logical combination is called "LIMIT LOGIC".

SENTRON PAC4200 provides parameterizable logic for combining the limit values that supports brackets, takes account of priority rules, and allows logical negation.

The logic is represented on the display using the graphic symbols familiar from digital technology: Four logic function blocks are connected upstream of one higher-level logic function block. Each of the upstream logic function blocks has 4 usable inputs.

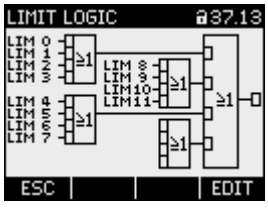

Figure 2-7 LIMIT LOGIC

The following logic operations can be selected for each logic function block:

- AND (AND operation)
- NAND (NOT AND operation)
- OR (OR operation)
- NOR (NOT OR operation)
- XOR (EXCLUSIVE OR operation)
- XNOR (EXCLUSIVE NOT OR operation)

Any limit values and the digital inputs of SENTRON PAC4200 can be selected at the inputs of the upstream logic function blocks. The input value is the truth value of the monitored signal:

- True: Limit value is violated or input is active.
- False: Limit value is not violated or input is not active.

Displaying limit violations

SENTRON PAC4200 outputs limit violations at the digital output or via the interfaces.

Limit violations are countable. One of the limit values can be assigned to the universal counters.

Limit violations are recorded as events with additional information on the monitored measured variable and the monitored threshold.

2.9 Function of the digital inputs and outputs

SENTRON PAC4200 has:

- Two multifunctional integral digital inputs
- Two multifunctional integral digital outputs
- Optionally up to 8 plug-in digital inputs
- Optionally up to 4 plug-in digital outputs

2.9.1 Digital output

The following functions can be assigned to the digital output:

- Not used
  The digital output is deactivated.
- Device is ready for operation
  The digital output is activated.
- Remote control
  The digital input is remotely controlled.
- Rotation
  The digital output is switched on by a counter-clockwise rotating electrical field and remains active while the direction of rotation of the field remains unchanged.
- Energy pulse
  The digital output outputs the parameterized number of pulses or edges per energy unit (e.g. kWh). The specified energy counter is evaluated here.

- Limit violation
  The digital output is switched on by a defined limit violation and remains active for as long as the limit violation persists.
- Synchronization pulse
  The digital output is switched on for the defined time (synchronization length).

Wiring

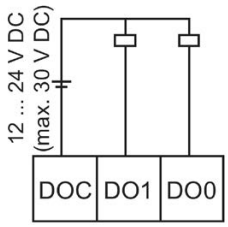

Figure 2-8 Block diagram: Digital outputs

The digital output is passive and implemented exclusively as a switch. Implementation of the pulse shape corresponds to the IEC 62053-31 standard.

Pulse length, turn-off time

(1) Pulse length
(2) Turn-off time

Figure 2-9 Pulse length and turn-off time

- **Pulse length:**
  Time for which the signal at the digital output is "high". The minimum pulse length is 30 ms and the maximum 500 ms.
- **Turn-off time:**
  Time for which the signal at the digital output is "low". The turn-off time depends on the measured energy, for example, and can be days or months.
- **Minimum turn-off time:**
  The minimum turn-off time is specified by the programmed pulse length.

2.9.2 Digital input

The following functions can be assigned to the digital input:

- Not used
  The digital input is deactivated.
- Pulse input
  Edge or pulse counting as required.
  Data is transferred with the help of weighted pulses or edges, e.g. a parameterizable number of pulses or edges is transferred per kWh.
  The countable unit can be defined application-specifically. The implementation of the pulse shape corresponds to the IEC 62053-31 standard.
- On-peak/off-peak tariff switching
- Time synchronization
- Measuring period synchronization (P/Qkum)
- Status with event logging
- Start/Stop (process energy counters and process hours counter)
  The process counters for active energy, reactive energy and apparent energy, and also the process hours counter are started or stopped by changing the state of the digital input.
- Copy and reset (process energy counters):
  - All process energy counters
  - The counter for process active energy (kWh)
  - The counter for process reactive energy (kvarh)
  - The counter for process apparent energy (kVAh)
- Reset (process energy counters and process hours counter):
  - All process energy counters and process hours counter
  - The counter for process active energy (kWh)
  - The counter for process reactive energy (kvarh)
  - The counter for process apparent energy (kVAh)
- Write protection

  Hardware write protection, to effectively prevent changes to the device parameters without physical access to the device.

  An auxiliary voltage of 12 V DC to 24 V DC is required at the digital input to activate or deactivate write protection.

  You can find more information on this in chapter Hardware write protection (Page 114).

2.10 Ethernet interface

Permits communication via the following protocols:

- Modbus TCP
  The device can be configured via Modbus TCP.
- Web server (HTTP)
  The protocol can only be used to read out the measured values via web browser.
- SNTP

  The SNTP (Simple Network Time Protocol) is used to automatically synchronize the internal clock with a time server within the network.

  Three function modes are available:

  – No synchronization.

  – Date/time synchronization via device request
    The IP address of an NTP server must be configured. With this, the SENTRON PAC4200 automatically requests the current time from the server and resets its internal clock, if necessary.

  – Date/time synchronization via SNTP server (BCST)
    The SENTRON PAC4200 receives broadcast time telegrams, which are sent from an NTP server. This is practical if the internal clocks of several devices in the same network need to remain synchronized.

  If the IP address of the NTP server has been configured, the SENTRON PAC4200 only responds to these frames. Furthermore, it can send a request to the server, if necessary.
- DHCP
  Stands for "Dynamic Host Configuration Protocol". Protocol for obtaining network settings from a DHCP server. Network settings are automatically assigned.

Autonegotiation is a method used by network communication peers to automatically negotiate the highest possible transmission rate. SENTRON PAC4200 is automatically set to the transmission rate of the communication peer if the latter does not support autonegotiation.

MDI-X auto crossover describes the ability of the interface to autonomously detect the send and receive lines of the connected device and adjust to them. This prevents malfunctions resulting from mismatching send and receive lines. Both crossed and uncrossed cables can be used.

2.11 Slots for expansion modules

SENTRON PAC4200 has two slots (MOD1 and MOD2) for installing optionally available expansion modules.

Please consult the current catalogs to find out which modules are available for SENTRON PAC4200.

One expansion module can be operated alone on the device or two expansion modules simultaneously.

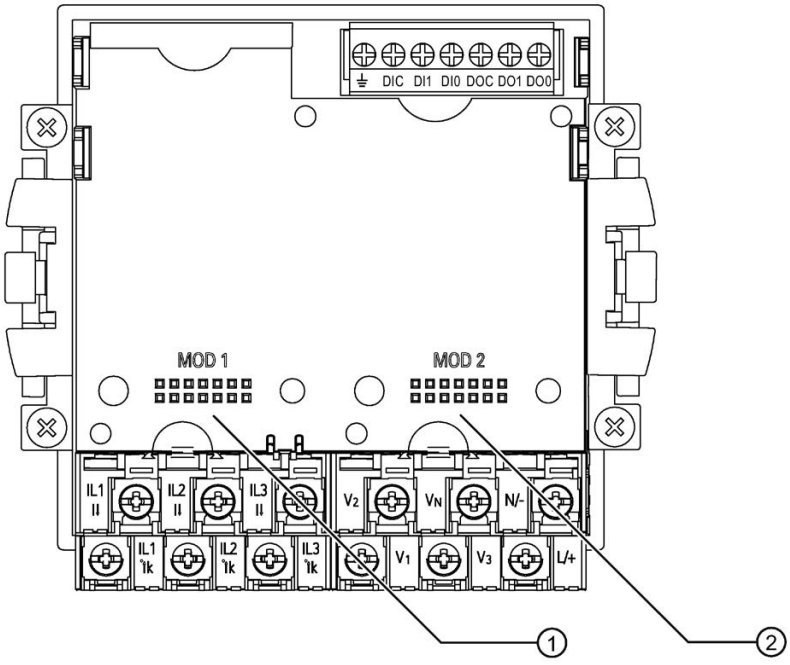

(1) Slot MOD1

(2) Slot MOD2

Figure 2-10 SENTRON PAC4200, rear

NOTICE
Material damage due to contamination Avoid contamination of the contact areas below the labels "MOD1" and "MOD2", since otherwise the expansion modules cannot be connected or can even be damaged. Insertion of metal pins or wires into the contact openings can result in device failure.

2.12 Gateway

SENTRON PAC4200 can be used as a gateway. This allows devices (slaves) that are connected to the RS485 expansion module of PAC4200 to be connected to a device over Ethernet (master).

Operating principle

Data sent by the master to the addressed target device: The higher-level software packages the serial protocol into TCP/IP packets. SENTRON PAC4200 unpacks the TCP/IP packets and forwards the freed packets of the serial protocol to the serial port (RS485).

Data sent by the addressed target device to the master: SENTRON PAC4200 packages the serial protocol packets into the TCP protocol and forwards the packaged user data to the higher-level software.

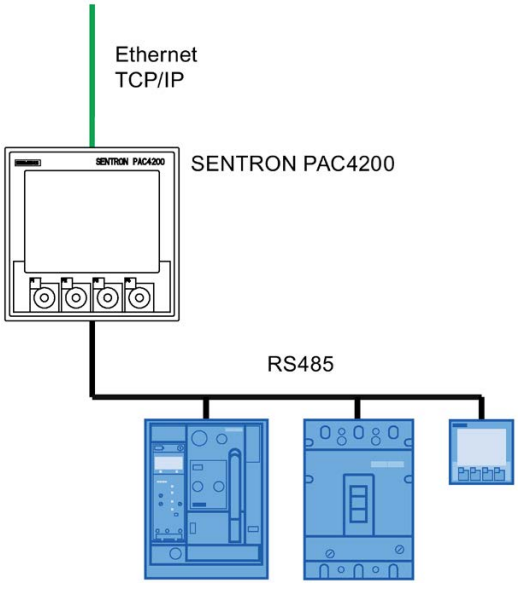

Figure 2-11 SENTRON PAC4200 as a gateway

Requirements and conditions

The SENTRON PAC RS485 expansion module is required to connect the RS 485 bus. According to the RS 485 bus specification, up to 31 devices can be addressed via the gateway without special RS 485 repeaters.

The higher-level software must support the serial protocol of the addressed target device as well as packaging/unpacking the serial protocol into/from TCP/IP.

Configuration of the gateway

SENTRON PAC4200 must be configured for using the gateway.

- Start up the SENTRON PAC RS485 expansion module on the SENTRON PAC4200.
- Set the communication parameters for operating the RS485 bus below the gateway. These settings are possible on the display of SENTRON PAC4200 or in the software.

You can find information about parameterizing RS 485 in the documentation for the SENTRON PAC RS485 expansion module or under Modbus-IDA (http://www.Modbus-IDA.org).

Addressing the target devices

The following address information is required in the software in order to address a device via the gateway of SENTRON PAC4200:

- IP address of SENTRON PAC4200
- Gateway port
  - Port 17002 if the RS485 bus is connected to the "MOD1" slot
  - Port 17003 if the RS485 bus is connected to the "MOD2" slot
- Bus address of the target device, e.g. MODBUS address
- Gateway type
  - Modbus gateway for integrating pure Modbus RTU slaves into an Ethernet network (Ethernet Modbus TCP ⇔ RS 485 Modbus RTU).
  - Serial gateway for connecting RS 485 devices that support Modbus RTU and similar protocols.

Further information

You will find further information under:
Modbus.org "MODBUS MESSAGING ON TCP/IP IMPLEMENTATION GUIDE"

See also

Modbus IDA (http://www.Modbus-IDA.org)

2.13 Insertion openings

Battery compartment

The SENTRON PAC4200 enclosure does not need to be opened in order to change the battery, as the battery compartment is accessible from the outside.

Battery to be used: 3 V lithium button cell type: CR2032

Slot for memory card

The card slot of the SENTRON PAC4200 has no function. The device does not contain a card reader.

Memory cards must not be inserted in the slot.

Battery to be used: 3 V lithium button cell type: CR2032

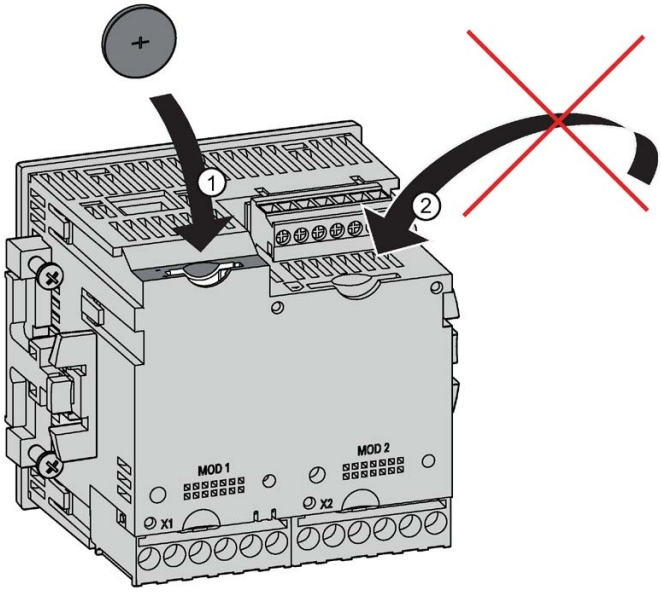

(1) Battery compartment

(2) Non-functional card slot opening

Figure 2-12 Insertion openings of the SENTRON PAC4200

NOTICE
Foreign body in the unit can trigger a short-circuit The battery compartment is intended exclusively for holding the battery. Foreign bodies introduced into the unit via the battery compartment or via the insertion opening of the card slot can cause a short-circuit and damage the device. It is not possible to retrieve any foreign bodies once inserted. Do not insert any foreign bodies into the device.

See also

Replacing the battery (Page 123)

2.14 User-definable displays

Up to four measurements can be individually configured for SENTRON PAC4200. Four presentational formats can be selected:

- Digital display of two measured variables
- Digital display of four measured variables
- Bar diagram for measured variables
- Bar diagram for three measured variables
- User-definable displays of counters in conjunction with the SENTRON PAC 4DI/2DO expansion module

Digital display

The instantaneous value, the designation, and the unit are shown for each measured variable.

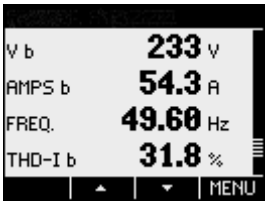

Figure 2-13 Example of a definable display (digital display)

Graphical display

The instantaneous value, designation, unit, and parameterizable value range are shown for each measured variable. The instantaneous value is represented as a bar diagram and digital information.

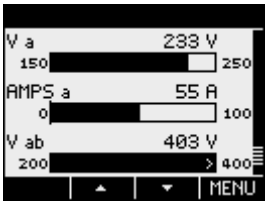

Figure 2-14 Example of a freely definable display (bar diagram)

An outward pointing arrow in the bar means that the instantaneous value displayed is outside the parameterized range.

Displays for counters

Users can define up to 5 displays in conjunction with the SENTRON PAC 4DI/2DO expansion module.

Configuring

The displays can be configured with the SENTRON powerconfig software.

Installation 3

3.1 Introduction

Mounting location

The SENTRON PAC4200 device is intended for installation in permanently installed switching panels within closed rooms.

⚠ WARNING
Only operate the device in a secure location. **Can cause death, serious injury or property damage.** The SENTRON PAC4200 must only be operated in a lockable control cabinet or a lockable room. Ensure only qualified personnel have access to this cabinet or room.

Conductive panels and doors on control cabinets must be grounded. The doors of the control cabinet must be connected to the control cabinet using a grounding cable.

Mounting position

The device is designed for vertical installation.

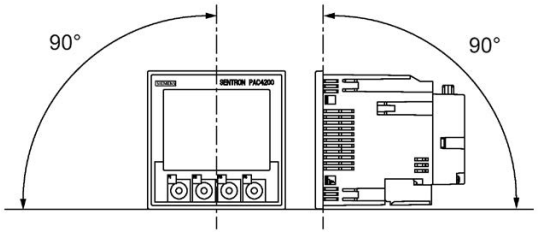

Figure 3-1 Mounting position

NOTICE
Ensure ventilation Insufficient ventilation may result in damage to the components. Please ensure that the ventilation slots of the housing are not obstructed. The wiring, cable feed or other components must not obstruct ventilation.

Note

Avoid condensation

Sudden fluctuations in temperature can lead to condensation. Condensation can affect the function of the device. Store the device in the operating room for at least two hours before commencing installation.

Circuit breaker

Connect a suitable circuit breaker upstream of SENTRON PAC4200 in order to disconnect the device from the power supply.

- The circuit breaker must be installed close to the device and must be easily accessible for the user.
- The circuit breaker must be marked as the circuit breaker for the device.

See also

Dimensional drawings (Page 141)

3.2 Inserting the battery

DANGER

Hazardous voltage.

Will cause death or serious injury.

Turn off and lock out all power supplying this equipment before working on this device.

For first start-up, use the battery supplied with the device (3 V lithium button cell type: CR2032). If you use another battery, this must meet the requirements listed in the chapter "Technical data".

Note

Use only batteries tested in accordance with UL1642.

Take note of the polarity indicated at the insertion opening of the battery compartment. Insert the battery into the battery compartment.

Note

Polarity of the battery

The opening of the battery compartment has the same shape as the battery. This determines the alignment of the terminals. It is not possible to insert the battery incorrectly.

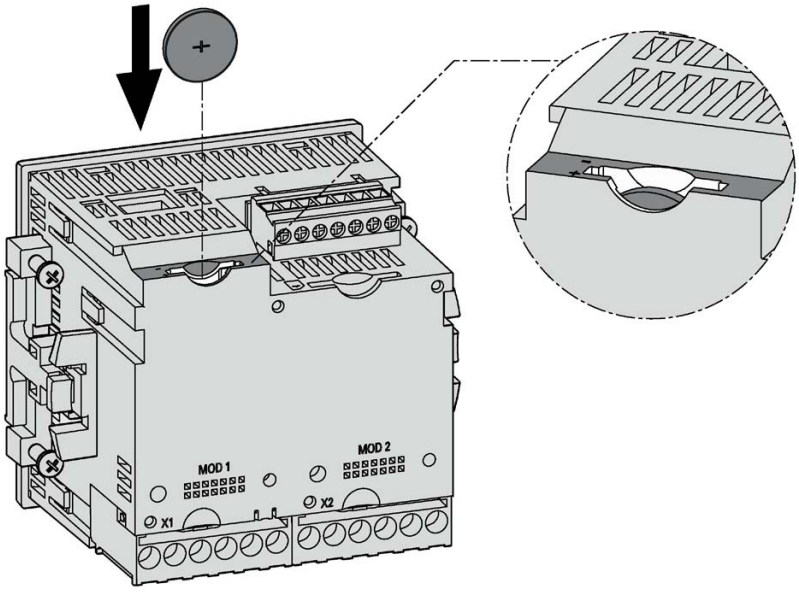

Figure 3-2 Using the battery

See also

Technical data (Page 127)

3.3 Tools

You require the following tools for installation:

- Cutting tool for the panel cutout
- PH2 cal. screwdriver ISO 6789
- Cable clamp for strain relief on all communication cables if used on the device.

3.4 Mounting on the switching panel

3.4.1 Mounting dimensions

Mounting and clearance dimensions

You can find information on the cutout dimensions, frame dimensions and clearance dimensions in the chapter "Dimensional drawings".

See also

Dimensional drawings (Page 141)

3.4.2 Installation steps

Proceed as follows to install the SENTRON PAC4200 in the switching panel:

Procedure

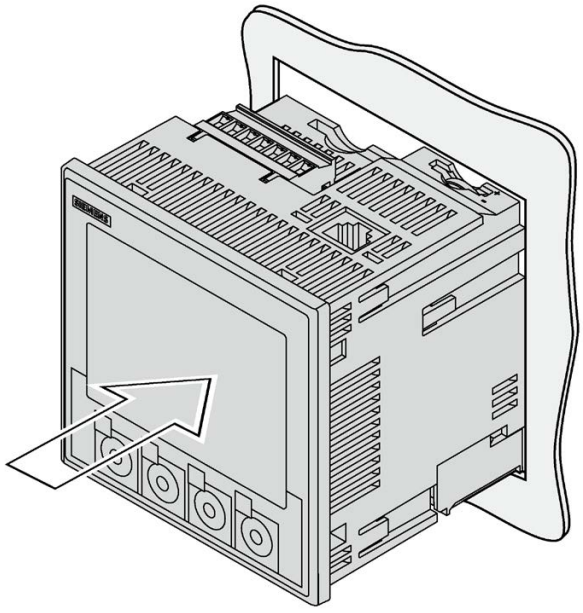

Figure 3-3 Installation step A, device with screw terminals

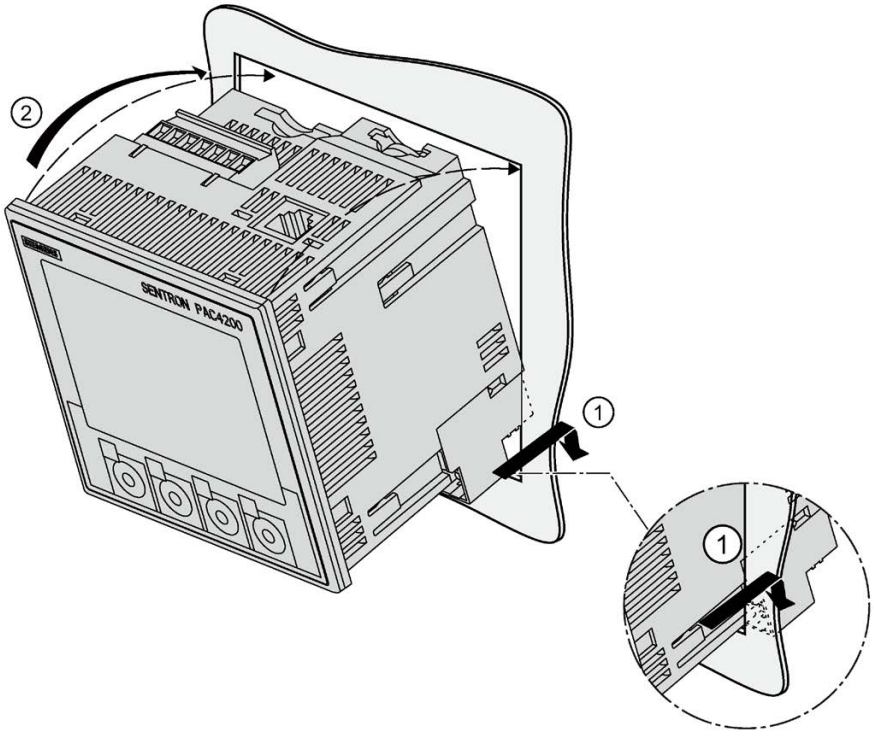

Figure 3-4 Installation step A, device with ring lug terminals

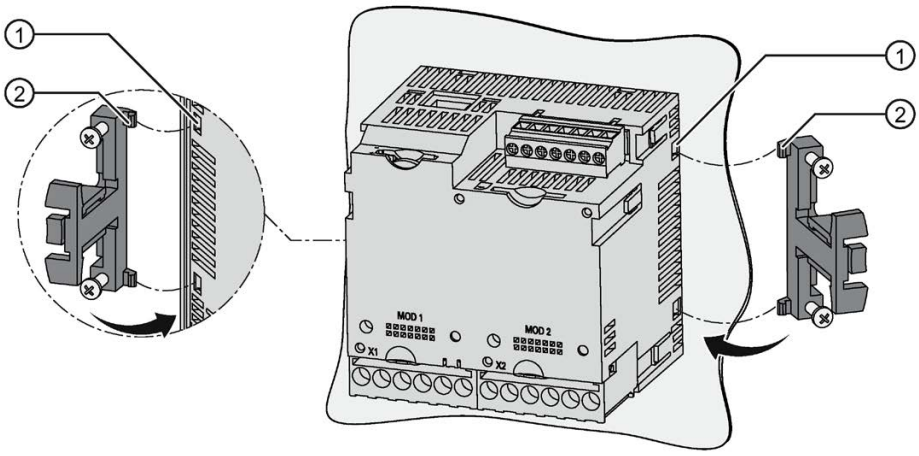

Figure 3-5 Installation step B

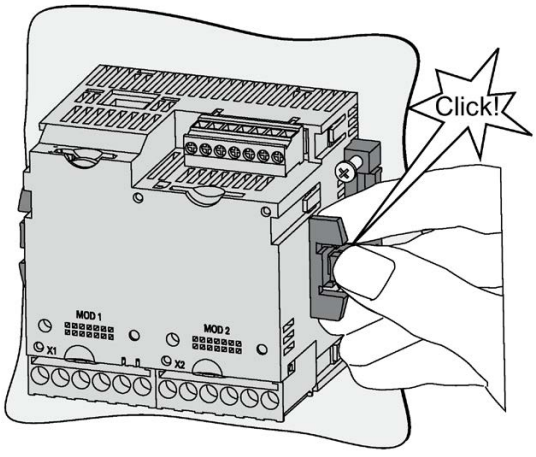

Figure 3-6 Installation step C

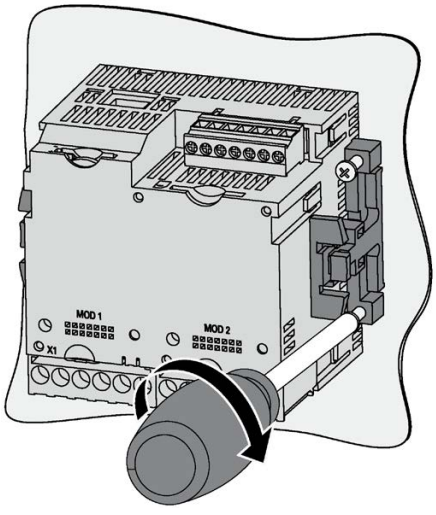

Figure 3-7 Installation step D

3.5 Deinstallation

Make sure the device has been shut down before you begin to deinstall it.

Tools

You require the following tools to deinstall the device:

- PH2 screwdriver
- Slotted screwdriver

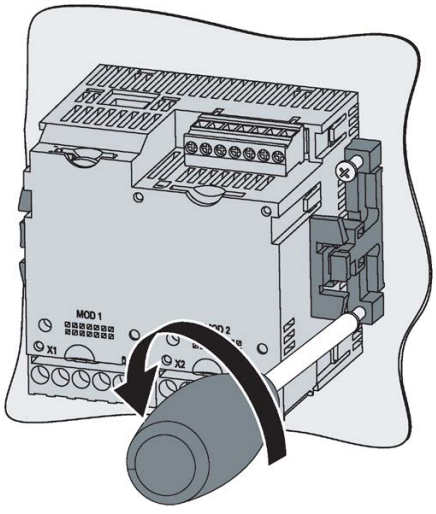

Figure 3-8 Deinstallation A, loosening the screw

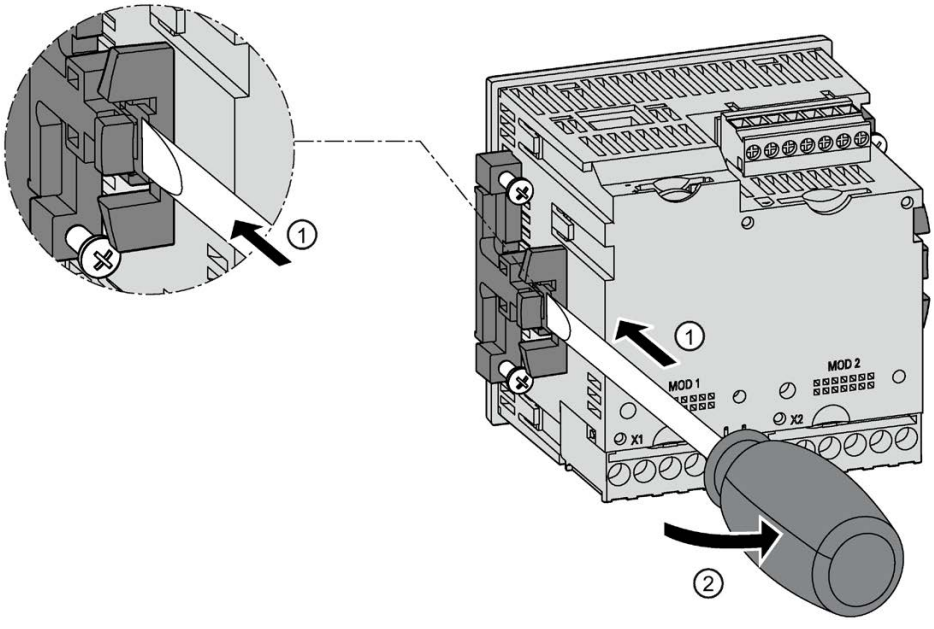

Figure 3-9 Deinstallation B, releasing the locking hooks

Connection 4

4.1 Safety information

Instructions

DANGER

Hazardous voltages!

Will cause death, serious injury or property damage.

Turn off and lock out all power supplying this equipment before working on this device.

DANGER

Open transformer circuits will result in electric shock and arc flashover.

Will cause death, serious injury or property damage.

When using the current transformers, the circuit is not protected by a fuse.

- Do not open the secondary circuit of the current transformers under load.
- Short circuit the secondary current terminals of the current transformer before removing this device.
- It is imperative that you follow the safety instructions for the current transformers used.

CAUTION

Protection of the supply voltage and voltage measuring inputs

The fuses in the supply voltage and the voltage measuring inputs are only used for cable protection. Selection of the fuse depends on the supply cable dimensioning. All commercially available fuses and automatic circuit breakers up to 16 A (C) or 20 A (B) can be used. Observe the applicable regulations when selecting the fuse.

NOTICE

The wrong system voltage can cause irreparable damage to the device.

Before connecting the device, check that the system voltage matches the voltage specified on the rating plate.

NOTICE
Grounding of current transformers optional The connection of the transformers and thus also the grounding of the transformers on the secondary side must always be carried out according to the applicable regulations. Grounding of the current transformers on the secondary side is not necessary for use in low-voltage switchboards for performing measuring tasks.

Note

Only qualified personnel are permitted to install, commission or service this device.

- Wear the prescribed protective clothing. Observe the general equipment regulations and safety regulations for working with high-voltage installations (e.g. DIN VDE, NFPA 70E as well as national or international regulations).
- The limits given in the technical data must not be exceeded even during commissioning or testing.
- The secondary connections of intermediate current transformers must be short-circuited at the transformers before the power supply lines to the device are interrupted.
- The polarity and phase assignment of the instrument transformers must be tested.
- Before connecting the device, check that the system voltage matches the voltage specified on the rating plate.
- Check that all connections are correctly made before startup.
- Before power is applied to the device for the first time, it must have been located in the operating area for at least two hours in order to reach temperature balance and avoid humidity and condensation.
- Condensation on the device is not permissible during operation.

See also

Applying the measuring voltage (Page 71)

Applying the measuring current (Page 72)

Applying the supply voltage (Page 68)

4.2 Connections

Note

Use of devices with ring lug terminals

Designed for use in:

- NAFTA/USA
- Regions in which open terminals are permitted.

Terminal labeling

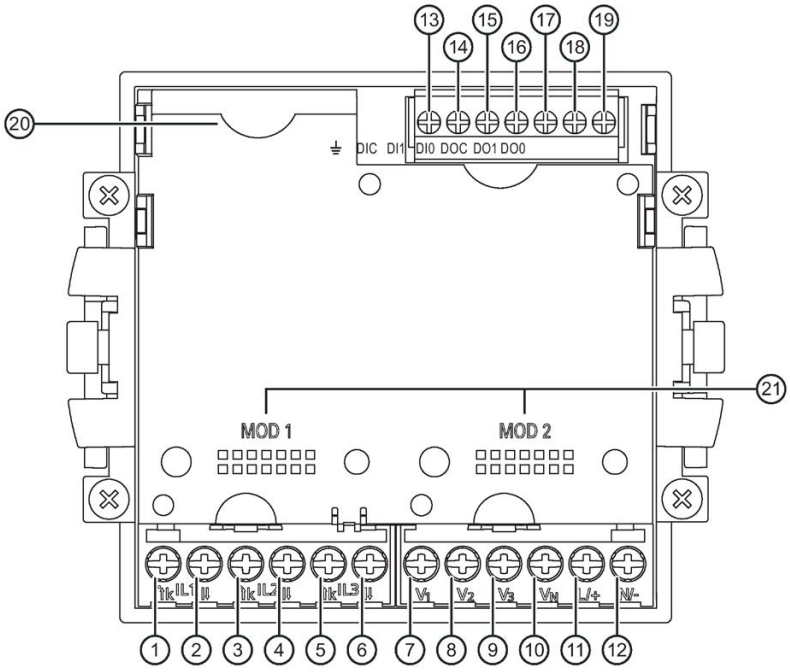

Figure 4-1 Terminal labeling, device with screw terminals

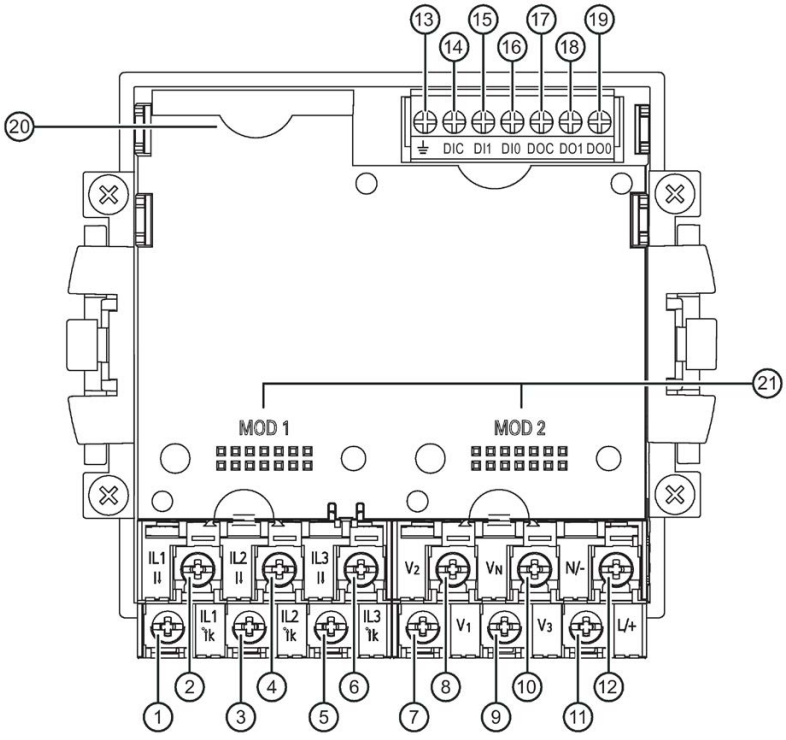

Figure 4-2 Terminal designation, device with ring lug terminals

No.	Connection	Function
(1)	IL1 ˚↑k	Current I_{L1}, input
(2)	IL1 I↓	Current I_{L1}, output
(3)	IL2 ˚↑k	Current I_{L2}, input
(4)	IL2 I↓	Current I_{L2}, output
(5)	IL3 ˚↑k	Current I_{L3}, input
(6)	IL3 I↓	Current I_{L3}, output
(7)	V_1	Voltage U_{L1-N}
(8)	V_2	Voltage U_{L2-N}
(9)	V_3	Voltage U_{L3-N}
(10)	V_N	Neutral conductor
(11)	L/+	AC: Connection: Phase conductor DC: Connection: +
(12)	N/-	AC: Connection: Neutral conductor DC: Connection: -
(13)	⏚	Reference potential
(14)	DIC	Digital input (common)
(15)	DI1	Digital input 1
(16)	DI0	Digital input 0
(17)	DOC	Digital output (common)
(18)	DO1	Digital output 1

No.	Connection	Function
(19)	DO0	Digital output 0
(20)	Battery	Battery compartment
(21)	MOD 1/2	Slot for optional expansion module

Grounding

Conductive panels and doors on control cabinets must be grounded. The doors of the control cabinet must be connected to the control cabinet using a grounding cable.

Reference potential

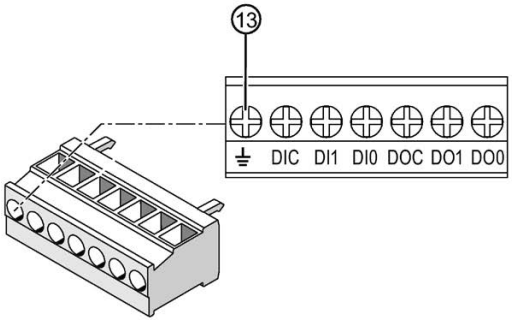

(13) Reference potential terminal

Figure 4-3 Terminal block: digital input and output, reference potential

The connection ⏚ "reference potential" discharges interference affecting the digital input and output and the RJ45 connector.

Connect the reference potential to the equipotential bonding strip in the control cabinet.

Phase-synchronous connection

The phases must be connected phase-synchronously. The specified terminal assignment cannot be changed by changing the parameters.

Protecting the current measuring inputs

DANGER

Open transformer circuits will result in electric shock and arc flashover.

Will cause death, serious injury or property damage.

Only measure current with external current transformers. Do not use fuses for circuit protection. Do not open the secondary circuit of the current transformers under load. Short circuit the secondary current terminals of the current transformer before removing this device. The safety information for the current transformers used must be followed.

Protection of the supply voltage and voltage measuring inputs

CAUTION

Protection of the supply voltage and voltage measuring inputs

The fuses in the supply voltage and the voltage measuring inputs are only used for cable protection. Selection of the fuse depends on the supply cable dimensioning. All commercially available fuses and automatic circuit breakers up to 16 A (C) or 20 A (B) can be used. Observe the applicable regulations when selecting the fuse.

4.3 Connection examples

The connection examples below show connection in:

- 2, 3 or 4-wire systems
- With balanced or unbalanced load
- With/without voltage transformer
- With current transformer

The device can be operated up to the maximum permissible voltage values with or without voltage measuring transformers.

It is only possible to measure the current with current transformers.

All input or output terminals not required for measuring remain free.

In the connection examples, the secondary side of the transformer is grounded at the "l" terminal as an example. It can be grounded at either the "k" or the "l" terminal.

The wiring method must be made known to the device in the device settings. The connection types given below refer to the device parameterization.

NOTICE

Grounding of current transformers optional

The connection of the transformers and thus also the grounding of the transformers on the secondary side must always be carried out according to the applicable regulations. Grounding of the current transformers on the secondary side is not necessary for use in low-voltage switchboards for performing measuring tasks.

Connection examples

(1) Three-phase measurement, four conductors, unbalanced load, without voltage transformer, with three current transformers

Connection type 3P4W

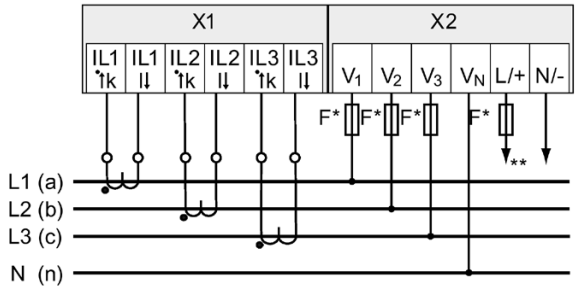

* The fuses are only used for cable protection.
All commercially available fuses and automatic circuit breakers up to 16 A (C) or 20 A (B) can be used.

** Connection of supply voltage

Figure 4-4 Connection type 3P4W, without voltage transformer, with three current transformers

(2) Three-phase measurement, four conductors, unbalanced load, with voltage transformer, with three current transformers

Connection type 3P4W

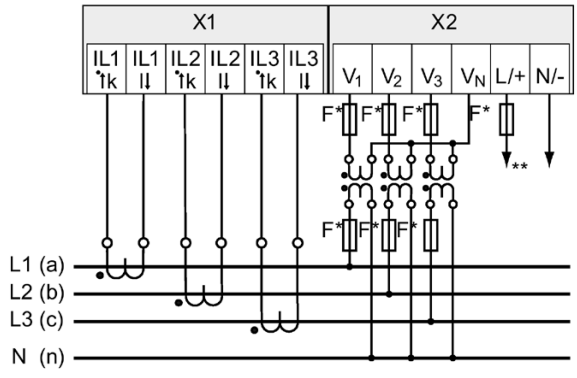

* The fuses are only used for cable protection.
All commercially available fuses and automatic circuit breakers up to 16 A (C) or 20 A (B) can be used.

** Connection of supply voltage

Figure 4-5 Connection type 3P4W, with voltage transformer, with three current transformers

(3) Three-phase measurement, four conductors, balanced load, without voltage transformer, with one current transformer

Connection type 3P4WB

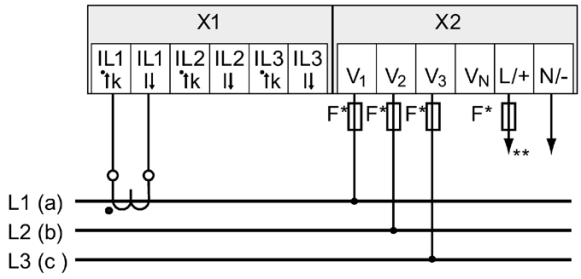

* The fuses are only used for cable protection.
All commercially available fuses and automatic circuit breakers up to 16 A (C) or 20 A (B) can be used.

** Connection of supply voltage

Figure 4-6 Connection type 3P4WB, without voltage transformer, with one current transformer

(4) Three-phase measurement, four conductors, balanced load, with voltage transformer, with one current transformer

Connection type 3P4WB

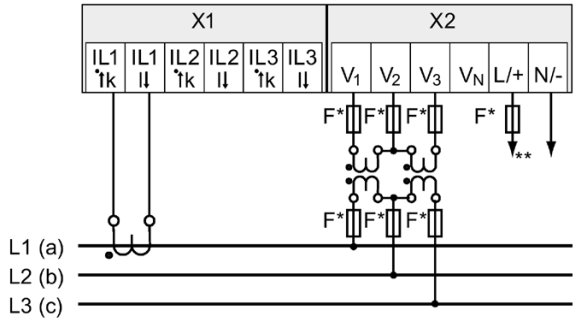

* The fuses are only used for cable protection.
All commercially available fuses and automatic circuit breakers up to 16 A (C) or 20 A (B) can be used.

** Connection of supply voltage

Figure 4-7 Connection type 3P4WB, with voltage transformer, with one current transformer

(5) Three-phase measurement, three conductors, unbalanced load, without voltage transformer, with three current transformers

Connection type 3P3W

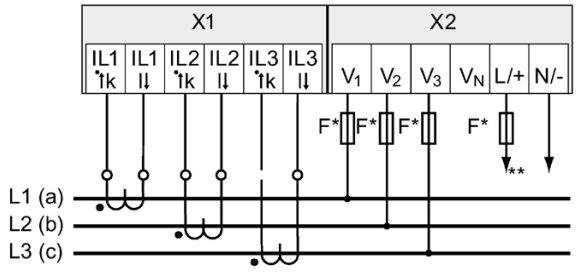

* The fuses are only used for cable protection.
All commercially available fuses and automatic circuit breakers up to 16 A (C) or 20 A (B) can be used.

** Connection of supply voltage

Figure 4-8 Connection type 3P3W, without voltage transformer, with three current transformers

(6) Three-phase measurement, three conductors, unbalanced load, with voltage transformer, with three current transformers

Connection type 3P3W

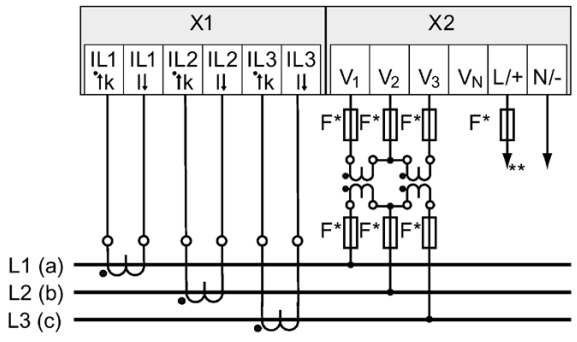

* The fuses are only used for cable protection.
All commercially available fuses and automatic circuit breakers up to 16 A (C) or 20 A (B) can be used.

** Connection of supply voltage

Figure 4-9 Connection type 3P3W, with voltage transformer, with three current transformers

(7) Three-phase measurement, three conductors, unbalanced load, without voltage transformer, with two current transformers

Connection type 3P3W

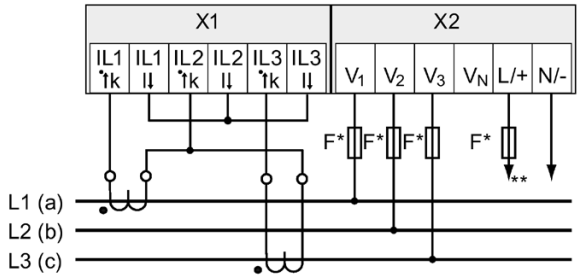

* The fuses are only used for cable protection.
All commercially available fuses and automatic circuit breakers up to 16 A (C) or 20 A (B) can be used.

** Connection of supply voltage

Figure 4-10 Connection type 3P3W, without voltage transformer, with two current transformers

(8) Three-phase measurement, three conductors, unbalanced load, with voltage transformer, with two current transformers

Connection type 3P3W

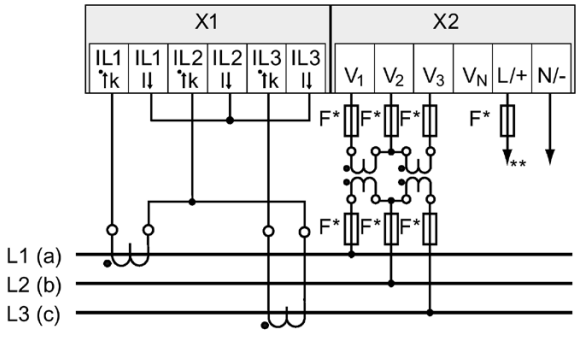

* The fuses are only used for cable protection.
All commercially available fuses and automatic circuit breakers up to 16 A (C) or 20 A (B) can be used.

** Connection of supply voltage

Figure 4-11 Connection type 3P3W, with voltage transformer, with two current transformers

(9) Three-phase measurement, three conductors, balanced load, without voltage transformer, with one current transformer

Connection type 3P3WB

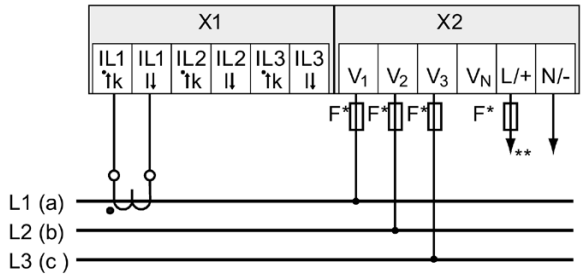

* The fuses are only used for cable protection.
All commercially available fuses and automatic circuit breakers up to 16 A (C) or 20 A (B) can be used.

** Connection of supply voltage

Figure 4-12 Connection type 3P3WB, without voltage transformer, with one current transformer

(10) Three-phase measurement, three conductors, balanced load, with voltage transformer, with one current transformer

Connection type 3P3WB

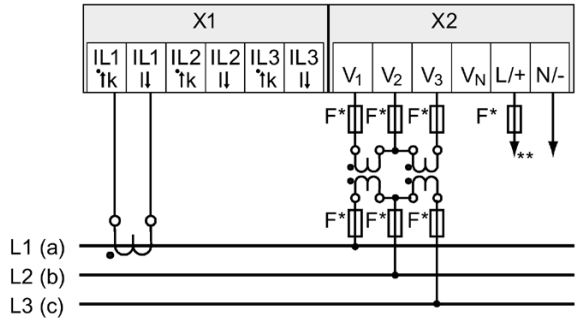

* The fuses are only used for cable protection.
All commercially available fuses and automatic circuit breakers up to 16 A (C) or 20 A (B) can be used.

** Connection of supply voltage

Figure 4-13 Connection type 3P3WB, with voltage transformer, with one current transformer

(11) Two-phase measurement, three conductors, unbalanced load, without voltage transformer, with two current transformers

Connection type 3P4W

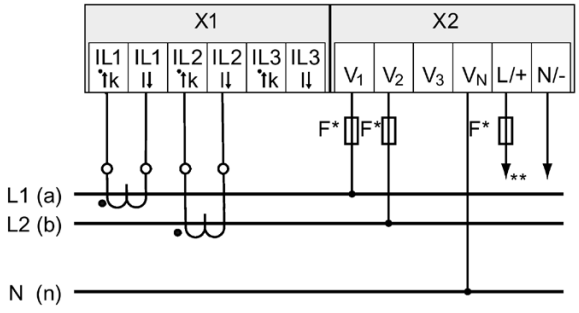

* The fuses are only used for cable protection.
All commercially available fuses and automatic circuit breakers up to 16 A (C) or 20 A (B) can be used.

** Connection of supply voltage

Figure 4-14 Connection type 3P4W, without voltage transformer, with two current transformers

(12) Single-phase measurement, two conductors, without voltage transformer, with one current transformer

Connection type 1P2W

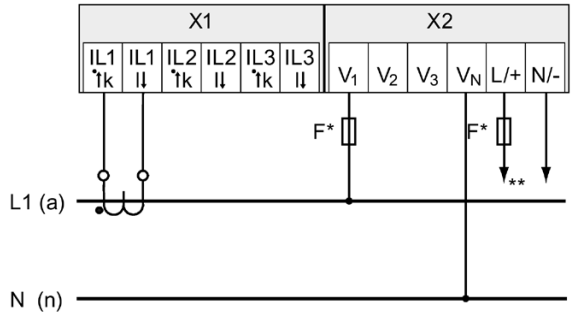

* The fuses are only used for cable protection.
All commercially available fuses and automatic circuit breakers up to 16 A (C) or 20 A (B) can be used.

** Connection of supply voltage

Figure 4-15 Connection type 1P2W, without voltage transformer, with one current transformer

See also

Applying the supply voltage (Page 68)

4.4 Grounding of the Ethernet cable

The Ethernet cable must be grounded for data transmission according to the Fast Ethernet standard.

Note

The upper limit values will be violated if the cable is not grounded

Compliance with the technical limit values for noise radiation and noise immunity is only guaranteed if the cable is correctly grounded. The operator of the system is responsible for ensuring compliance with the statutory limit values (CE mark).

Make a shield connection on both sides as described here.

Type

Ground the Ethernet cable near the SENTRON PAC4200 device. To do this, expose the foil shield of the Ethernet cable. Connect the exposed shield to a suitable grounding point on the control cabinet, preferably a shielding bus.

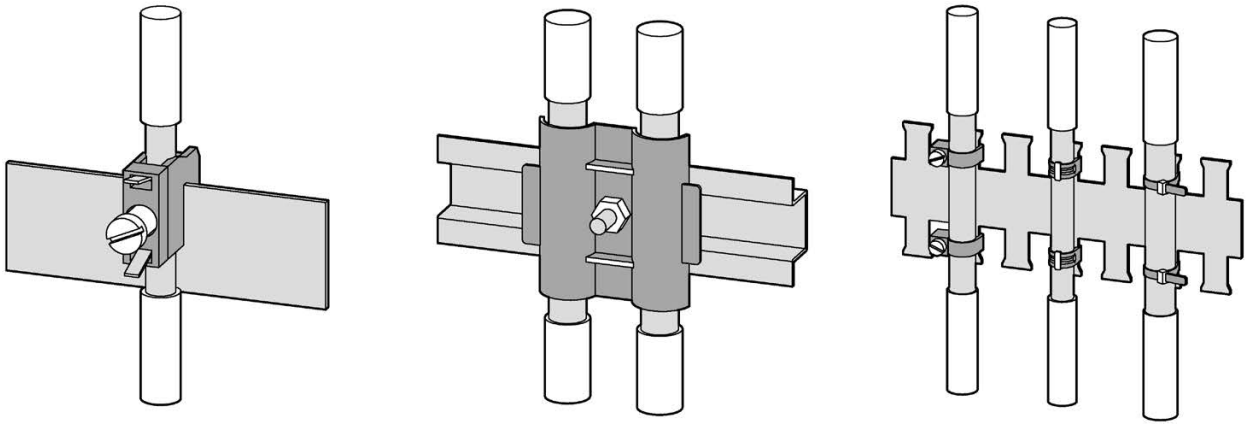

Figure 4-16 Grounding of the Ethernet cable

- Be careful not to damage the foil shield of the cable when removing the cable jacket.
- Fasten the exposed shield with a metal cable clamp or alternatively with a hose tie. The clamp must clasp around a large portion of the shield and provide good contact.
- To allow good contact, a tin-plated or galvanically stabilized surface is ideal. With galvanized surfaces, the contact should be achieved using suitable screws. A painted surface at the contact point is not suitable.

Note

Loss of contact if the shield connection is incorrectly used for strain relief

If the shield connection is used for strain relief, the grounding contact can deteriorate or be completely lost.

Don't use the contact point on the cable shield for strain relief.

Commissioning 5

5.1 Overview

Prerequisites

1. The battery has been inserted into the battery compartment.
2. The device has been installed.
3. The device has been connected in accordance with the possible connection methods.
4. The Ethernet cable has been connected (optional).

Steps for starting up the device

1. Applying the supply voltage
2. Parameterizing the device
3. Applying the measuring voltage
4. Applying the measuring current
5. Checking the displayed measured values
6. Check the polarity and the phase assignment of the measuring transducers.

Note

Checking the connections

Incorrect connection can result in malfunctions and failure of the device.

Before starting up the SENTRON PAC4200, check that all connections are correct.

5.2 Applying the supply voltage

SENTRON PAC4200 can be supplied with:

- A wide-voltage AC/DC power supply
- An extra-low voltage DC power supply

A supply voltage is required to operate the device. Refer to the technical data or the rating plate for the type and level of the permissible supply voltage.

NOTICE
Improper Power Supply May Damage Equipment Failure to apply the correct power supply may result in damage to the device and the equipment. The minimum and maximum limits given in the technical data and on the rating plate must not be exceeded even at startup or when testing the device. Observe the correct polarity when connecting DC supply voltage.

See also

Applying the measuring voltage (Page 71)

Technical data (Page 127)

Safety information (Page 53)

5.3 Parameterizing the device

To start up the device, you must specify the operating parameters listed below in the device settings:

- Basic parameters

The following settings are also useful:

- Language
- Date/time
- Device protection against manipulation

5.3.1 First start-up

The language selection only appears:

- On first start-up
- After resetting to factory settings
- After updating the firmware

Select the required language and confirm your selection by choosing "OK".

5.3.2 Basic parameters

Set the basic parameters:

- Connection type
- Voltage
  - Direct measurement on the system or using voltage transformers
  - Measuring input voltage in the case of direct measurement on the system
  - Primary and secondary voltage when measuring using voltage transformers
- Current
  - Primary current
  - Secondary current

Refer to chapters Operation (Page 73) and Parameterizing (Page 89).

Example:

You want to measure in a 3P4W 10 kV system using voltage transformers (10000V/100V) and current transformers (100/5A).

1. Select the "BASIC PARAMETERS" submenu of the "SETTINGS" menu.
2. Specify the connection type and the ratio of the voltage transformers you are using in the "VOLTAGE INPUT" menu item.

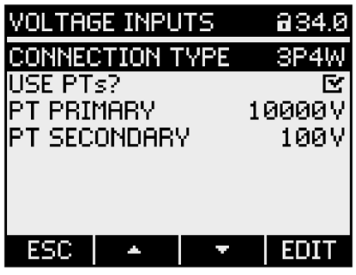

3. Confirm your entry and press "ESC" to return to the "BASIC PARAMETERS" submenu.
4. Specify the ratio of the current transformers you are using in the "CURRENT INPUT" menu item.

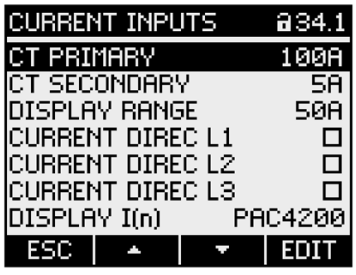

5. You can configure the resolution of the current display in the "DISPLAY RANGE" menu item. The setting has no impact on the measurement accuracy of the device. The recommended setting is the current that is usually flowing in the system. If the usual current is 50 A, set the display range to 50 A. In this case, the current is displayed with one decimal place.

5.3.3 Additional settings

Language

After first start-up, the language of the text on the display can be set in the "LANGUAGE/REGIONAL" submenu of the "SETTINGS" menu.

Date/time

Date and time can be set in the "DATE/TIME" submenu of the "SETTINGS" menu.

Device protection against manipulation

In order to reduce the risk of manipulation occurring on the device, it is recommended that the protective mechanisms available in the device are activated.

You can find more detailed information in chapter Protection against manipulation (Page 111).

Refer to chapters Operation (Page 73) and Parameterizing (Page 89).

5.4 Applying the measuring voltage

SENTRON PAC4200 with a wide-voltage power supply is designed for measuring in systems with a rated AC voltage up to:

- 400 V phase-to-neutral (max. 347 V for UL)
- 690 V phase-to-phase (max. 600 V for UL)

SENTRON PAC4200 with an extra-low voltage power supply is designed for measuring in systems with a rated AC voltage up to:

- 289 V phase-to-neutral
- 500 V phase-to-phase

NOTICE
Observe limit values The maximum limits given in the technical data or on the rating plate must not be exceeded even at startup or when testing the device. Measurement of DC voltage is not possible. External voltage transformers are required to measure higher voltages than the permissible rated input voltages.

See also

Applying the supply voltage (Page 68)

Measuring inputs (Page 16)

Safety information (Page 53)

5.5 Applying the measuring current

The device is designed for connection of current transformers with secondary currents of 1 A and 5 A. It is only possible to measure alternating currents.

The current measuring inputs can each be loaded with 10 A continuously or with 100 A for 1 second.

DANGER

Open transformer circuits will result in electric shock and arc flashover.

Will cause death, serious injury or property damage.

Only measure current with external current transformers. Do not use fuses for circuit protection. Do not open the secondary circuit of the current transformers under load. Short circuit the secondary current terminals of the current transformer before removing this device. The safety information for the current transformers used must be followed.

NOTICE

Alternating current measurement only, otherwise the device will become non-functional

Use the device to measure alternating current only.

Direction of current flow

Please take account of the direction of current flow when connecting the current measuring inputs. With inverse connection, the measured values are inverted and receive a negative sign.

To correct the direction of current flow, it is not necessary to reverse the input terminals. Instead, change the interpretation of the direction in the device settings.

You can find information about the device settings in the "Basic parameters" section of the "Parameterization via the user interface" chapter.

See also

Measuring inputs (Page 16)

Safety information (Page 53)

5.6 Checking the displayed measured values

Correct connection type

With the help of the table "Displaying the measured variables depending on the connection type", check whether the measured variables are displayed in accordance with the connection type executed. Any deviation indicates a wiring fault or configuration error.

Operation

6

6.1 Device interface

6.1.1 Displays and operator controls

Displays and operator controls

The front of SENTRON PAC4200 has the following displays and operator controls.

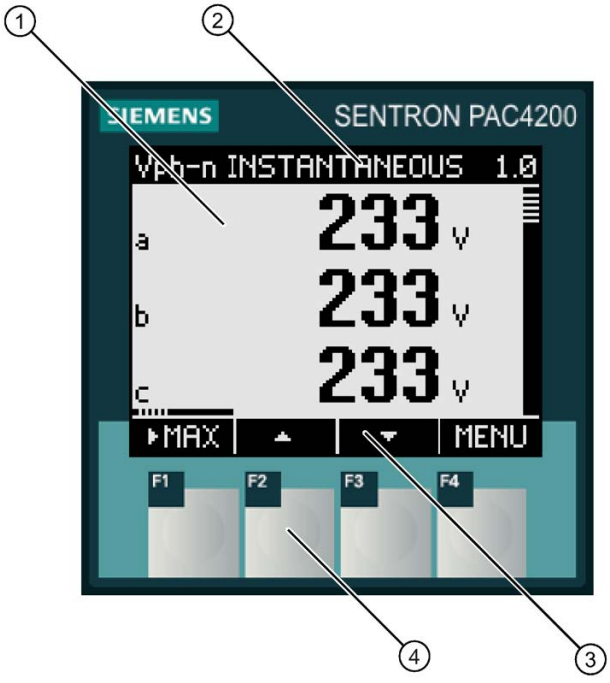

(1) Display area: Represents the current measured values, device settings and selection menus.

(2) Header area: Specifies the information visible in the display area.

(3) Footer area: Specifies the functions assigned to the function keys.

(4) Surfaces of the function keys:

The keys have multiple assignments. Function assignments and key labeling change according to the context of operator input. The designation of the current key function can be seen above the key number in the footer area of the display.

A short press on the key triggers the function once. Holding the key down for longer switches on the autorepeat function after approximately 1 second. The function of the key is triggered repeatedly while the key is held down. Autorepeat is useful, for example, for fast incrementing of values when parameterizing the device.

Figure 6-1 User interface of SENTRON PAC4200

6.1.2 Special display elements

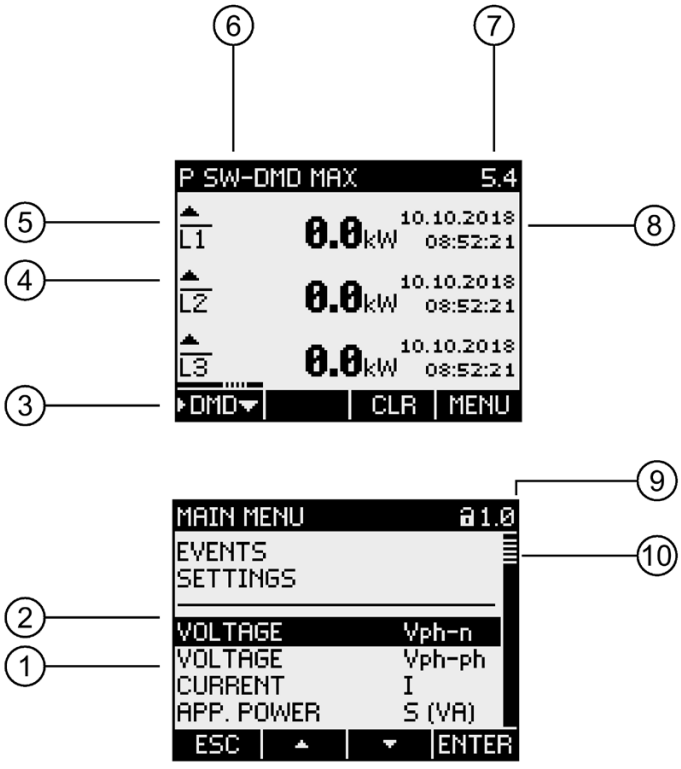

Symbol	Meaning
1	Selection bar
2	Separating line between start of list/end of list
3	Scroll bar of function key F1 (multiple assignments of key F1)
4	• Up arrow: Maximum value • Down arrow: Minimum value
5	Line above measured value: Sliding window demand
6	Display title
7	Display number
8	Time stamp
9	Device protection symbol • Open padlock: Protection deactivated • Padlock closed: Protection activated
10	Scroll bar (display can be scrolled upwards/downwards)

6.1.3 Menu-based navigation

The menu-based navigation is intuitive and self-explanatory. Only the basic structure of the menu-based navigation will be explained for this reason. The description and function of the individual parameters can be found in chapter Parameterizing (Page 89).

The device menu can be subdivided into four menu levels:

- Measured value level
- Main menu level
- Setting level
- Editing level

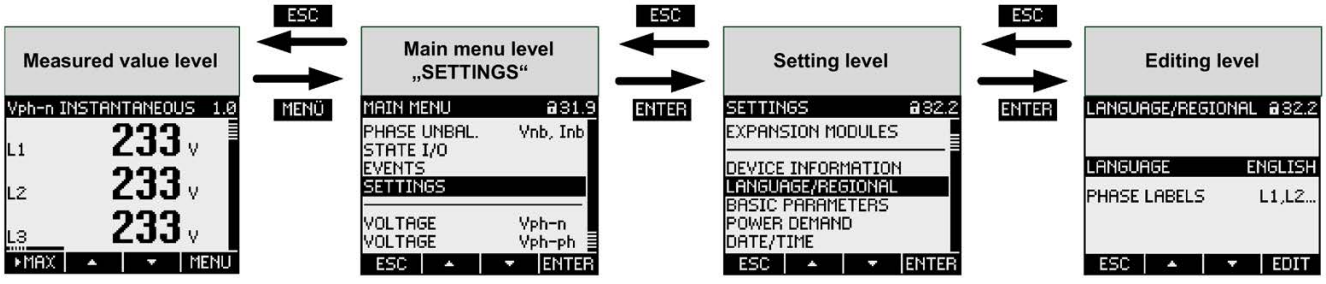

Depending on the device version and firmware status, the availability of the measured values may vary in the measured value and main menu levels. The parameter selection options at the setting and editing levels also depend on the device version and firmware status.

6.1.4 Measured value level

By default, the device is at the **measured value level**.

At the **measured value level**, the available measured values can be read off. All possible measured values are listed in the table in chapter Measured variables (Page 18). The selection of measured values depends on the device version and connection type.

Using the keys ▲ and ▼ you can scroll through the **measured values**.

When measured values are selected, additional information can be called up with the **F1** key. This is indicated by the ▸MAX scroll bar above the key label.

The MENU key returns the device to the main menu level.

6.1.5 Main menu level

In this menu level, all available measured variables are listed without measured values. The **main menu level** also has a "SETTINGS" selection menu item which can be used to configure the device.

The ESC key returns the device to the **measured value level**.

Using the keys ▲ and ▼ you can scroll through the menu items.

The ENTER key confirms the required selection and takes the device to the measured value level.

In the "SETTINGS" menu item, the device is set to the **setting level** by actuating the ENTER key.

6.1.6 Setting level

At the **setting level** the device can be configured. At this menu level, all settable parameters are listed.

The ESC key returns the device to the **main menu level**.

Using the keys ▲ and ▼ you can scroll through the setting parameters.

The ENTER key confirms the required selection and takes the device to the **editing level**.

6.1.7 Editing level

You can change device parameters in the **editing level**.

The ESC key returns the device to the **setting level**.

The required value can be adjusted using the EDIT key.

Use the keys + | → or ☐◀▶☑ to select the required input.

The input is confirmed with the OK key.

6.1.8 Control keys

The device can be operated by means of four keys. The keys are assigned different functions. The functions of the keys depend on the menu level currently in use.

Keys	Possible assignment	Meaning
	▸MAX	Display the maximum value
	▸MIN	Display the minimum value
	▸MW	Display the sliding window demand
	▸MW▲	Display the maximum value of the sliding window demand
	▸MW▼	Display the minimum value of the sliding window demand
	▸INST.	Display the instantaneous value
	▸EXP.	Display the exported energy
	▸IMP.	Display the imported energy
	▸PRC	Display the total consumption and display the process consumption with current consumption value and last consumption value
	▸⏲	Display the energy consumption per tariff for a specific period
	▸ φ	Display the displacement angle φ
	▸COS	Display the cosine of the displacement angle φ
	▸ TAB.	Display the graph values
	GRAPH	Display the graph
	▸UL-N	Display the THD of the voltage between the phase and neutral conductor
	▸UL-L	Display the THD of the voltage between the phase conductors
	ESC	Reject the menu selection and return to the last displayed measured variable

Keys	Possible assignment	Meaning
F2	▲	Scroll up in the selection list
	INFO	Display additional information
	◀	Scroll to the left.
	EXP∅	Display the energy export per tariff for a specific period
	IMP∅	Display the energy import per tariff for a specific period
	+	Increment the numerical value by "1" or show the next selectable setting
F3	CLR	Reset the extreme value to the instantaneous value
	▼	Scroll down in the selection list
	▶	Scroll to the right.
	–	Decrement the numerical value by "1" or show the previous selectable setting
	–▶	Go to the next digit to the right in the multi-digit numerical value
F4	MENU	Go to the menu selection
	⟳	Display the next additional information
	ENTER	Display the selected measured variable or device setting
	EDIT	Change to edit mode
	☐◀▶☑	Switch the setting ON/OFF
	OK	Save the changes and return to previous mode

6.2 Special displays

6.2.1 Phasor diagram

The phasor diagram provides a coherent picture of the actual unbalance values of the fundamental.

The graphical representation is assigned a value table. F1 ▸TAB. / GRAPH switches between the two representations.

Special displays of the phasor diagram

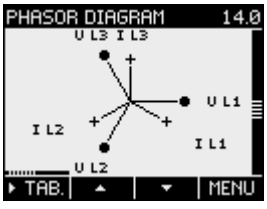

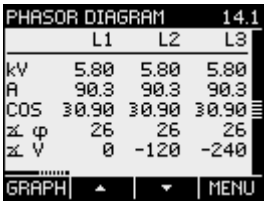

The length of graphical axes in the diagram symbolizes the amplitude unbalance.

Symbol	Meaning
	Current
	Voltage
	Phase angle L1-L2
	Phase angle L1-L3
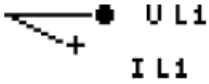	Displacement angle L1
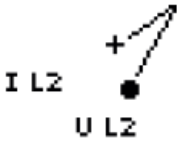	Displacement angle L1
	Displacement angle L1

Symbol	Meaning
COS	Cosine of the displacement angle φ
∡φ	Displacement angle φ
∡U	Phase angle
⅗	Inductive
⅘	Capacitive

6.2.2 Measurement of 1st to 64th harmonics for voltage and current

Harmonics are mainly caused by equipment with a non-linear characteristic, such as fluorescent lamps, transformers and frequency converters. They are integer multiples of a fundamental.

The SENTRON PAC4200 measures integer voltage and current harmonics and shows the results on the display. It is also possible to read out the data using Modbus command 0xFC20 "Read File Record 0x14".

Bar diagram on device display

The device gives you the option of displaying only the odd (3rd to 63rd) or all (1st to 64th) the harmonics on the display.

Show harmonics on SENTRON PAC4200 display:

1. Select the "Display" submenu of the "Settings" menu.
2. The display type can be selected in the "FFT style" menu item:
   – Harmonics "3, 5, 7 to 63" (display of odd harmonics)
   – Harmonics "2, 3, 4 to 64" (display of even and odd harmonics)

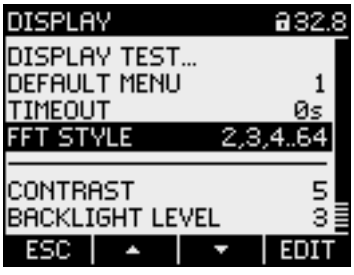

3. The following harmonic displays are available on the device display:
   - Harmonic UL-N (display 15.0)

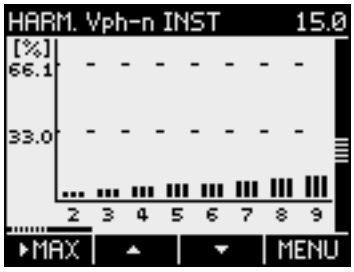

   - Harmonic UL-L (display 16.0)

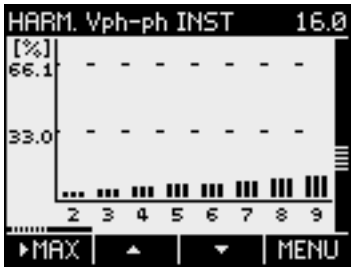

   - Harmonic I (display 17.0)

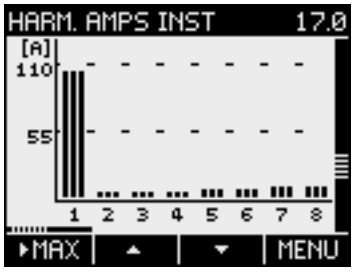

4. The following additional functions can be called using the F1 key ▸MAX:
   - Max values
   - Delete max values
   - Scroll right/left

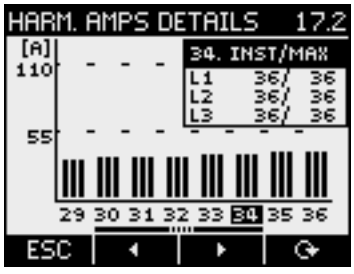

You can find more information in chapter Readout of harmonic components of all harmonics with function codes 0x03, 0x04 and 0x14 (Page 172).

6.2.3 Events

The device reports the occurrence of certain events. These events are listed in the event recording undertaken by SENTRON PAC4200. You can acknowledge acknowledgable events in a popup window on the device.

Displaying events

Table 6- 1 Meaning of the symbols in the events list

Symbol	Meaning
No symbol	Information
!	Warning
	Alarm
	Incoming event
	Outgoing event
	Overcurrent, overvoltage
▶	Changed
Q	Acknowledged event
#	Interrupt, error, missing
	Upper limit violated, out of range
	Lower limit violated
...= 0	Reset
...= 1	Condition met

The events are divided into the following event classes:

- Operating information
- System information
- Operation

The following information is shown for each event:

- Event
- Event class
- Date and time when the event occurred
- Reason why the event occurred
- Interface if applicable
- Measured variable affected and corresponding measured value if applicable
- Limit value if applicable
- Address of the digital output if applicable
- Address of the digital input if applicable

Table 6- 2 The following events are reported:

Event	Event class	Standard warning level	Reason	Remedy
START PMD	System information	Information	Voltage recovery	-
PMD INFO	System information	Warning	PMD information	Please contact Support.
COMM.FAULT	System information	Warning	A communications fault has occurred at the slot xx interface.	Check the network settings
FW UPDATE #	System information	Warning	Transmission error: The firmware is not suitable.	Make sure you are using the correct firmware version for the update. Restart the firmware update.
TIME CORR:	System information	Information	Top of minute: The time has been corrected.	-
TIME SYNC #	System information	Information	The time synchronization has failed. Interface: Slot xx	The "Top of minute" pulses for synchronizing the time are not active. Check the hardware and the settings for transmitting the "Top of minute" pulses.
VOLTAGE #	Operating information	Warning	The supply voltage has been interrupted. Measured variable x	The device has been disconnected from the network in accordance with the schedule. An error has occurred. Check the power supply.
VOLTAGE	Operating information	Alarm	The voltage is out of range. Measured variable x	Danger of serious or fatal injury or of serious damage to the device. Make sure the system is operating under conditions for which SENTRON PAC4200 is approved. It is possible that the measured values are not correctly displayed. Please contact Support.
CURRENT	Operating information	Alarm	The current is out of range. Measured variable x	
LIM	Operating information	Information	The upper limit value xxxx has been exceeded. Measured variable x, limit value xxxx	-
LIM	Operating information	Information	The lower limit value xxxx has been exceeded. Measured variable x, limit value xxxx	-

Event	Event class	Standard warning level	Reason	Remedy
LIMIT LOG. OP=1	Operating information	Information	The limit logic operation complies with the limit value xxxx.	-
TARIFF ▶	Operating information	Information	Tariff change to ...	-
STATUS DI ▶	Operating information	Information	The digital input is activated. DI address xx.xx	-
STATUS DO ▶	Operating information	Information	The digital output is activated. DO address xx.xx	-
PULSE FREQ	Operating information	Information	The pulse frequency is too high. DO address xx.xx	-
TIME ▶	Operating information	Information	The time was set on: Slot xx interface	-
FACT. DEFAULTS	Operating information	Information	The factory defaults have been set. Slot xx interface	-
VOLTAGE INTERRUPT	Operating information	Information	Voltage interruption referred to nom. voltage value • Duration in seconds • Residual voltage in volts • Affected phase	-
VOLTAGE SWELL	Operating information	Information	Swell in measuring voltage, referred to nominal voltage value • Duration in seconds • Residual voltage in volts • Affected phase	-
VOLTAGE DIP/SAG	Operating information	Information	Swell in measuring voltage, referred to nominal voltage value • Duration in seconds • Residual voltage in volts • Affected phase	-
BASIC PARAM	Operation	Warning	The basic configuration has been changed. Slot xx interface	-
SETTING	Operation	Warning	The configuration has been changed. Slot xx interface	-
COMM.	Operation	Information	The communication configuration has been changed. Slot xx interface	-
MAX/MIN=0	Operation	Information	The maximum/minimum values were reset. Slot xx interface	-

Event	Event class	Standard warning level	Reason	Remedy
OP.HOURS=0	Operation	Information	The operating hours counter has been reset. Slot xx interface	-
D ENERGY=0	Operation	Information	The day energy counter has been reset. Slot xx interface	-
EVENT=0	Operation	Information	The event recordings have been deleted. Slot xx interface	-
LOAD REC.=0	Operation	Information	The load profile recording has been deleted. Slot xx interface	-
ENERGY C.=0	Operation	Information	All energy counters have been reset. [1)] Value 00000000 Slot xx interface	-
UNIV.=0	Operation	Information	The universal counters have been reset. Value 00000000 Slot xx interface	-
PASSWORD	Operation	Information	Password protection is activated. Slot xx interface	-
PASSWORD ▶	Operation	Information	The password has been changed. Slot xx interface	-
FIRMWARE	Operation	Information	The firmware has been updated. Version PAC4200 Vx.xx Slot xx interface	-

[1)] Counter = active energy and reactive energy for import and export tariff 1/2, apparent energy tariff 1/2

Acknowledging an event

If an event is set to "acknowledgable" in the software, a popup window for this event opens on the device. Acknowledge the event in the popup window with "OK". Acknowledgment closes the popup window. The event is logged in the event memory.

Settings in the SENTRON software

You can make the following settings in the software:

- Change the warning level for an event
- Acknowledge an event
- Entry of an event in the event memory
- Output of the event on the communication module
- Order of appearance on the display

6.3 Supporting software

6.3.1 SENTRON powermanager

Using the SENTRON powermanager energy management software energy data of the SENTRON PAC4200 measuring device can be acquired, monitored, evaluated, displayed and archived.

SENTRON powermanager offers the following functions:

- Tree view of the customer's system (project tree)
- Measured value displays with pre-defined user views
- Alarm management
- Demand curve
- Reporting, different report types (e.g. cost center report)
- Load monitoring of reaction plans
- Power peak analysis (available as of SENTRON powermanager V3.0 SP1)
- Support of distributed plants (systems)
- Archiving system
- User administration

6.3.2 SENTRON powerconfig

The powerconfig software is the combined commissioning and service tool for communication-capable measuring devices and circuit breakers from the SENTRON family.

The PC-based tool facilitates parameterization of the devices, resulting in substantial time savings, particularly when several devices have to be set up. Using powerconfig, measuring devices from the 7KM PAC series can be parameterized and operated via various communication interfaces, and measured values can be documented and monitored.

SENTRON powerconfig provides the following functions:

- Parameterization, documentation, operation and monitoring in one software
- User-friendly documentation of settings and measured values
- Clear presentation of the available parameters including plausibility testing of the input values
- Display of the available device statuses and measured values in standardized views
- Project-oriented storage of device data
- Consistent operation and usability
- Support of the various communications interfaces (MODBUS-RTU, MODBUS-TCP, PROFIBUS, PROFINET)
- Updating of device firmware and loading of language packs (device-dependent)

Note

You launch the Online Help in SENTRON powerconfig by pressing the F1 key.

6.3.3 Web server

The device can be read out with a PC/notebook via the website using the web server integrated in the device. Communication takes place via MODBUS TCP protocol.

The web server provides the following functions:

- Device information (e.g. serial number, firmware status)
- View and evaluation of the measured values

Start web server:

1. Connect the device to the PC or network via the Ethernet interface.
2. Make sure that the PAC4200 and the configuration computer are in the same subnet.
3. Enter the IP address of the device in the browser.

HTTP port: 80 (default setting)

Parameterizing 7

7.1 Introduction

Device settings

The "Parameterizing" chapter describes the device settings. This includes:

- Adjustment to the physical conditions of use
- Integration into the communication system
- Country-specific settings, ergonomics, device protection

It is possible to set the device by means of:

- The operator interface of the device
- Configuration software

Note

Protection of the device settings

As delivered, the device settings are not protected. The device protection functions must be activated on start-up to guard against unauthorized or inadvertent changes.

7.2 Parameterizing via the user interface

7.2.1 Parameterizing via the user interface

The SENTRON PAC4200 can be parameterized via the "Settings" menu options. You can find more information on this in chapter Menu-based navigation (Page 75).

The device settings are arranged into the following groups. The "SETTINGS" menu shows the choice of groups:

- **Device information**

  Article number and versions
- **Language/Regional**

  Display language and designation of the phases on the display
- **Basic parameters**

  Settings for the measuring inputs, averaging time of the sliding window demand, zero point suppression, frequency
- **Power demand**

  Settings for the load profile
- **Date/time**

  Time-related settings
- **Integrated I/Os**

  Settings for using the digital inputs and outputs
- **Communication**

  Network communication settings
- **Display**

  Settings for the display
- **Advanced**

  Password protection, limit values, universal counter, battery change, device reset, expansion modules
- **Settings for expansion modules**

  Functions for expansion modules available as options

7.2.2 Device information

The device information cannot be modified.

PAC4200	Device designation
7KM4212-0BA00-3AA	Article number of the device
S/N: xxxxxx	Serial number of the device
D/T: xxxxxx	Date code
ES: xxx	Hardware revision level
SW-REV: xxxx	Firmware revision level
BL-REV: xxxx	Bootloader revision level
LP-REV: xxxx	Language pack version

7.2.3 Language/Regional

The language of menu-based operation and of the measured value displays can be set in the "Language/Regional" menu item.

Selection	Range	Factory setting
Language	Chinese, English, French, German, Italian, Portuguese, Polish, Russian, Spanish, Turkish	English
Phase labels	• L1, L2, L3 • a b c	L1, L2, L3

7.2.4 Basic parameters

Measuring inputs can be parameterized in the "Basic parameters" menu item.

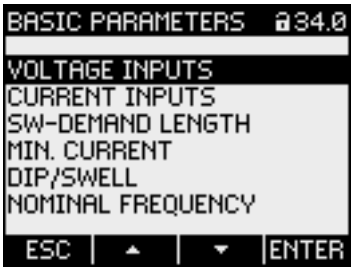

Voltage input

Selection	Range	Factory setting
Connection type	• 3P4W 3 phases, 4 conductors, unbalanced load • 3P3W 3 phases, 3 conductors, unbalanced load • 3P4WB 3 phases, 4 conductors, balanced load • 3P3WB 3 phases, 3 conductors, unbalanced load • 1P2W 1 phase, 2 conductors, unbalanced load	3P4W
Use PTs?	• ☑ ON: Measurement using voltage transformers. When measuring via voltage transformer, the device must know the voltage transformation ratio. For this purpose, the primary and secondary voltages must be specified in the fields "PT PRIMARY" and "PT SECONDARY". When changing from direct measurement to measurement using voltage transformers, the device accepts the last set reference measuring voltage as the secondary voltage and as the primary voltage. • ☐ OFF: Measurement directly on the low-voltage system. When changing from measurement using voltage transformers to direct measurement, the device accepts the last set secondary voltage as the reference measuring voltage.	☐ OFF
Measuring voltage	• 1 V ... 690 V, freely adjustable (max. 600 V for UL) • 1 V ... 500 V, freely adjustable (PAC4200 with extra-low voltage supply unit)	• 400 V • 289 V
PT PRIMARY (provided Use PTs? ☑ ON)	1 V ... 999999 V, freely adjustable	400 V
PT SECONDARY (provided Use PTs? ☑ ON)	• 1 V ... 690 V, freely adjustable (max. 600 V for UL) • 1 V ... 500 V, freely adjustable (PAC4200 with extra-low voltage supply unit)	• 400 V • 289 V

Current input

Selection	Range	Factory setting
CT PRIMARY	Primary current of the current transformers 1 A … 99999 A	50 A
CT SECONDARY	Secondary current of the current transformers • 1 A • 5 A	5 A
• CURRENT DIREC L1 • CURRENT DIREC L2 • CURRENT DIREC L3	Inverse evaluation of the current flow direction separately for each phase. • ☑ ON: Direction of current flow is inverted. The device interprets the current flow direction opposite to the wiring. • ☐ OFF: The device interprets the current flow direction in accordance with the wiring.	☐ OFF

AV TIME SW DEMAND

Selection	Range	Factory setting
AVERAGING TIME	Averaging time for the sliding window demand. • 3 s • 5 s • 10 s • 30 s • 60 s • 300 s • 600 s • 900 s	600 s

Minimum current

Selection	Range	Factory setting
MEASUREMENT	Zero point suppression level as a percentage of the primary rated current of the external current transformer: The minimum current measurement is used for zero point suppression so that zero is displayed below this limit. 0 ... 10%	0.0%
WORK HOUR	Measuring threshold for operating hours counter as a percentage of I_N 0 ... 10%	0.0%

Voltage dip/swell

Selection	Range	Factory setting
NOM. VOLTAGE	Specification of nominal voltage Udin according to IEC 61000-4-30. The specification refers to the L-N measuring voltage. In 3-wire systems, the specification refers to the L-L measuring voltage. 0 V … 999999 V	230 V
VOLTAGE DIP	Specification of dip threshold referred to NOM.VOLTAGE value. When the measured value falls below the threshold, evaluation of the voltage dip is initiated. 0.0% ... 100%	90%
VOLTAGE DIP HYSTERESIS	Specification of hysteresis referred to NOM.VOLTAGE value. When the measured value falls below or rises above the VOLTAGE DIP threshold plus HYSTERESIS, evaluation of the voltage dip is started or ended. 0.0% ... 5%	2%
VOLTAGE SWELL	Specification of swell threshold referred to NOM.VOLTAGE value. When the measured value rises above the threshold, evaluation of the voltage swell is initiated. 100.0% … 120%	110%
VOLTAGE SWELL HYSTERESIS	Specification of hysteresis referred to NOM.VOLTAGE value. When the measured value rises above or falls below the VOLTAGE DIP threshold plus HYSTERESIS, evaluation of the voltage swell is started or ended. 0.0% ... 5%	2%
VOLTAGE INTERRUPTION	Specification of threshold for a voltage interruption referred to NOM.VOLTAGE value. When the measured value rises above or falls below the threshold, evaluation of the voltage swell is initiated or ended. 0.0% ... 100%	10%
VOLTAGE INTERRUPTION HYSTERESIS	Specification of hysteresis referred to NOM.VOLTAGE value. When the measured value rises above or falls below the VOLTAGE INTERRUPTION threshold plus HYSTERESIS, evaluation of the voltage swell is started or ended. 0.0% ... 5%	2%

Nominal frequency

Selection	Range	Factory setting
NOM. FREQUENCY	Input of line frequency in Hz • AUTO • 50 Hz • 60 Hz	AUTO

7.2.5 Power demand

Settings for the load profile can be made in the "Power demand" menu item.

You can find more information on the load profile in chapter Load profile (Page 23).

Selection	Range	Factory setting
SUBPERIOD TIME	• 1 min • 2 min • 3 min • 4 min • 5 min • 6 min • 10 min • 12 min • 15 min • 20 min • 30 min • 60 min	15 min
SUBPERIOD #	• 1: "Fixed block" • 2 … 5: "Rolling block"	1
SYNC. SOURCE	Source of the synchronization pulse for synchronizing the load profile recording. • NONE: Synchronization switched off. • BUS: Synchronization via the communication interfaces. • DIG.INPUT: Synchronization via digital input • INT. CLOCK: Synchronization via the internal clock. For synchronization via the digital input, the digital input must first be parameterized for this purpose. The "SYNC. SOURCE" field is automatically reset to "NONE" if another function is assigned to the digital input.	NONE

7.2.6 Date/time

Setting the date and time.

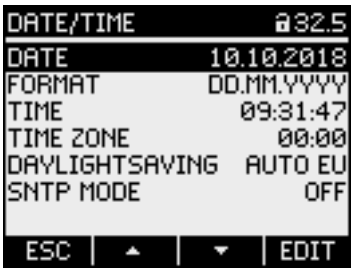

Selection	Range	Factory setting
DATE	Current date The date format is defined in the FORMAT field.	-
FORMAT	• DD.MM.YYYY • YYYY-MM-DD • MM/DD/YY	DD.MM.YYYY
TIME	HH:MM:SS	-
TIME ZONE	Time zone, refers to coordinated universal time (UTC). −12:00 … +14:00, in 30-minute intervals Examples: • "−06:00" corresponds to UTC-6 • "+01:00" corresponds to UTC+1	00:00
DAYLIGHTSAVING	Automatic time change • OFF: Time change is switched off. • AUTO EU: Time change within the European Union The internal clock is put forward from 1 a.m. UTC to 2 a.m. UTC on the last Sunday in March. Changeover to standard time: The internal clock is put back from 2 a.m. UTC to 1 a.m. UTC on the last Sunday in October. • AUTO US: Time change within the USA The internal clock is put forward from 2 a.m. local time to 3 a.m. on the second Sunday in March. Changeover to standard time: The internal clock is put back from 2 a.m. local time to 1 a.m. on the first Sunday in November. • TABLE: Time change can be individually parameterized. The parameters can be set in the software.	AUTO EU
SNTP	Protocol is used for transmitting the time and for synchronization. • OFF: SNTP function deactivated. • ACTIVE: The device automatically requests the time from the NTP server. • BCST client: The device receives time telegrams which are sent from an NTP server.	OFF
SNTP-IP (only when SNTP is activated)	If an SNTP IP address is configured, only data from this IP address is accepted. 0.0.0.0	0.0.0.0

7.2.7 Integrated I/Os

Device settings for using the digital inputs and outputs.

Digital output

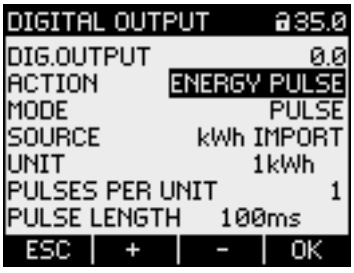

Selection	Range	Factory setting
DIG.OUTPUT	Two digital outputs are available: • 0.0 • 0.1	-
ACTION	• OFF: Output is deactivated. • DEVICE ON: Output signals that the device is switched on. • REMOTE CONTROL: Output is controlled by remote access. • ROTATION: Output is activated by a clockwise rotating electrical field and remains active while the field's direction of rotation remains unchanged. • SYNC: Synchronization of other devices. • LIM. VIOLATION: The output is switched on by a limit violation and remains active for as long as the limit violation persists. • ENERGY PULSE: Output outputs the parameterized number of pulses or edges per energy unit.	OFF
MODE (only with ENERGY PULSE)	Output of pulses or edges. • PULSE: Pulses are output. • EDGE: Edges are output.	PULSE
SOURCE (with LIM.VIOLATION)	Selects the limit whose status is output to the digital output. • LIMIT LOGIC • LIMIT 0 ... 11	LIMIT LOGIC

Selection	Range	Factory setting
SOURCE (only with ENERGY PULSE)	Selects the type of cumulated power (active energy or reactive energy): • kWh IMPORT • kWh EXPORT • kvarh IMPORT • kvarh EXPORT The reference values at which a pulse or an edge is output are defined in the fields "UNIT" and "PULSES PER UNIT".	kWh IMPORT
UNIT (only with ENERGY PULSE)	Value of the cumulated power at which a configurable number of pulses or edges is output. • 1 kVarh or kW • 10 kVarh or kW • 100 kVarh or kW • 1000 kVarh or kW The number of pulses or edges to be output is defined in the field "PULSES PER UNIT" or "EDGES PER UNIT".	1
PULSES PER UNIT (only with ENERGY PULSE)	Number of pulses to be output per unit. 1 … 999 The reference unit is defined in the "UNIT" field.	1
PULSE LENGTH	Length of the pulse. 30 ms ... 500 ms The minimum length of the pulse pause corresponds to the pulse duration specified.	100 ms

Digital input

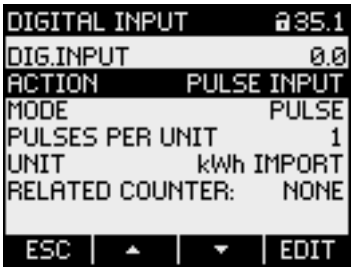

Selection	Range	Factory setting
DIG.INPUT	Two digital inputs are available: • 0.0 • 0.1	-
ACTION	• NONE: Input is deactivated. • WRITE PROTECTION: Input is used as write protection. Auxiliary voltage at input is needed. • PULSE INPUT: Counting of input pulses. Note: A universal counter can be parameterized for pulse counting. In the device settings "ADVANCED → UNIVERSAL COUNTER", set the "SOURCE" field to the value "DIG. INPUT". • ON-PEAK/OFF-PEAK: Switching between tariffs. Low tariff if input active. • TIME SYNC: Time synchronization, "top of minute". The internal clock is put forward or back, depending on whether the time is up to 30 seconds fast or slow. If a pulse is not received for 20 minutes, an event is recorded. If changes are made in the "Date/Time" screen, the synchronization pulse does not take effect until the screen is closed. • DEMAND SYNC: Synchronization of power demand. • STATUS: One event is recorded for each switching operation. • START/STOP: Starts or stops the counters specified under "Target". This depends on whether the associated digital input is active or inactive. If it is active, the action starts. If it is inactive, the action stops. • COPY&RESET: Copies and resets the counters specified under "Target". For this purpose, the associated digital input is switched from inactive to active. • RESET: Resets the counters specified under "Target". For this purpose, the associated digital input is switched from inactive to active.	NONE

Selection	Range	Factory setting
MODE (only with PULSE INPUT)	Counting of pulses or edges. • PULSE: Pulses are counted. • EDGE: Edges are counted.	PULSE
PULSES PER UNIT (only with PULSE INPUT)	Number of pulses that must be received per unit in order for the counter to be incremented by "1". 1 … 999 The reference unit is defined in the "UNIT" field.	1
UNIT (only with PULSE INPUT)	Unit to be counted when counting the pulses or edges received: • kWh (active energy) • kvarh (reactive energy)	-
TEXT	"TEXT" stands for a user-definable unit, e.g. m^3/h or pieces. The text sequence used to name the unit must be defined via the communication interface. The defined text sequence is displayed in the "TEXT" field when you select "TEXT".	-
TEXT (only with PULSE INPUT → TEXT)	Text sequence used to name the unit to be counted. See "UNIT" field.	-
TARGET	You will find more detailed information in the following table.	-
RELATED COUNTER	The associated user-defined pulse counter is displayed here independently of the action selected. This function is only available if at least one SENTRON PAC 4DI/2DO expansion module is plugged into the SENTRON PAC.	-

Target	Description	START/ STOP	COPY/ RESET	RESET
PROCESS&PULSE	Relates to: • All process energy counters • The process operating hours counter • All pulse counters	-	-	x
PULSE COUNTER	All pulse counters	-	-	x
PULSE COUNTER 1 ... n	Specific pulse counter	-	-	x
PROCESS COUNTER	All process energy counters	x	x	x
PROCESS COUNTER kWh/kVAR/kVAh	Specific process energy counter	-	x	x

7.2.8 Communication

Configuration of the communication interface.

A change in the TCP/IP address only becomes effective after the device has been restarted.

If you exit the "COMMUNICATION" device setting with the F1 key, the device asks if you want to restart.

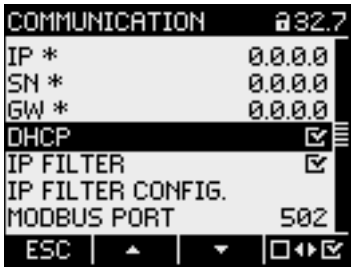

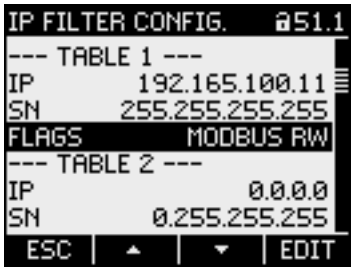

Selection	Range	Factory setting
MAC	MAC address. Read only.	-
IP	Manual setting of the IP address is only possible when DHCP is deactivated. Format: 000.000.000.000	-
SN	Manual setting of the subnet is only possible when DHCP is deactivated. Format: 000.000.000.000	-
GW	Manual setting of the gateway is only possible when DHCP is deactivated. In the case of data exchange with an IP address which is not in the home subnet, the data can be transmitted via a gateway. The gateway interconnects different networks. Format: 000.000.000.000	-
DHCP	(Dynamic Host Configuration Protocol) If DHCP is activated, network configurations are automatically assigned. This enables automatic integration of devices in an existing network. If DHCP is activated, network configurations cannot be adjusted manually.	☑ ON
IP FILTER	The IP filter is a configurable access protection. If the IP filter is activated, Modbus TCP commands are only accepted if the remote terminal unit has been cleared (whitelisted). • ☑ ON: Access to the device is refused if the request comes from an uncleared host. • ☐ OFF: IP filter deactivated	☐ OFF
MODBUS PORT	0 … 65534	502
IP FILTER CONFIG.	Configuration of IP filter. Access rights to the SENTRON PAC4200 are defined in up to 5 tables depending on requirements. The configuration menu is described in the table below.	-

Selection	Range	Factory setting
IP (table 1-5)	Assignment of access rights for specific IP address/addresses. Format: 000.000.000.000	-
SN (table 1-5)	Assignment of access rights for specific subnets. Format: 000.000.000.000	-
FLAGS (table 1-5)	Configuration of access type: -MODBUS R (read access only) -MODBUS RW (read and write access) -DEACTIVATED (table deactivated)	Deactivated
HTTP port	Manual setting of the HTTP port (web server). With the HTTP port = 0 setting, the web server is deactivated.	80

7.2.9 Display

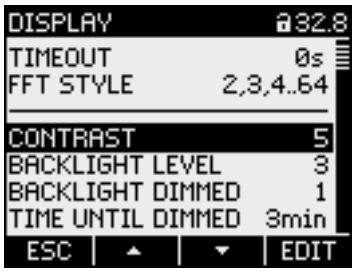

Selection	Range	Factory setting
CONTRAST	Contrast of the LC display. 0 … 10	5
BACKLIGHT LEVEL	Intensity of the backlighting of the LC display. 0 … 3	3
BACKLIGHT DIMMED	Intensity of the backlighting of the LC display. Set by the device after the display time until dimmed expires. See "TIME UNTIL DIMMED" field 0 (switches backlighting off) ... 3	1
TIME UNTIL DIMMED	Time after which the device switches the backlighting from "BACKLIGHT LEVEL" to "BACKLIGHT DIMMED". 0 min … 99 min	3 min
INVERT DISPLAY	Inversion of the basic representation of the display. • ☑ ON: Dark text on light background • ☐ OFF: Light text on dark background	☑ ON
REFRESH TIME	Refresh rate of the display. 330 ms ... 3000 ms The tolerance of the refresh rate is 100 ms.	330 ms
DISPLAY TEST	Screen for testing the functional capability of the display. • Key F3 inverts the test screen. • Key F4 closes the display.	-
DEFAULT MENU	The menu display number for the main menu can be entered here. The device always starts up with the menu item defined here. 1 … 28	1
TIMEOUT	The menu display time can be specified here. When the specified time has elapsed, the device automatically returns to the defined main menu. 0 s (function deactivated) … 3600 s	0 s
FFT STYLE	The device gives you the option of displaying either the odd (3rd to 63rd) or all (1st to 64th) harmonics on the PAC4200 display. • 3, 5, 7 … 63: Only odd harmonics • 2, 3, 4 … 64: All harmonics	3, 5, 7 … 63

7.2.10 Advanced

Write protection

Selection	Range	Factory setting
WRITE PROTECTION	Write access is not possible when the hardware write protection is activated. • ☑ ON: Write protection active • ☐ OFF: Write protection deactivated	☐ OFF

In order to gain write access, the hardware write protection must be deactivated directly on the device. The hardware write protection cannot be deactivated via a communication interface.

Password protection

Password protection prevents the following actions:

- Changing of device settings, including password
- Changing and deleting of values
- Deleting of data and memory content
- Setting and resetting of counts
- Restoring the factory settings

Reading out of measured values and memory content is possible without restriction when password protection is active.

Selection	Range	Factory setting
PASSWORD PROTECTION	Password protection prevents write access via the device interface and the communication interfaces. • ☑ ON: Password protection active • ☐ OFF: Password protection deactivated	☐ OFF
PASSWORD	0000 … 9999	0000

Note

If you have forgotten the password, please contact Technical Support. You will receive a new password from them.

Limit values

Monitoring of up to 12 limit values "LIM0" to "LIM11" and the limit value "LIMIT LOGIC". The limit value "LIMIT LOGIC" can be made up of any combination of the limit values "LIM0" to "LIM11" and the digital inputs I0.0 and I0.1.

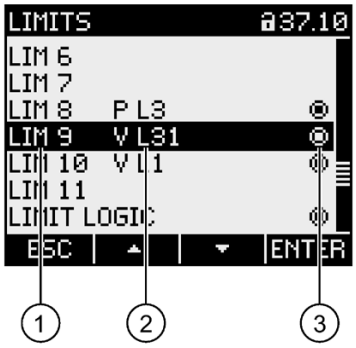

① Left column: Limit value designation

② Middle column: Monitored data source

③ Right column: Limit value currently violated:

- ☑ Yes
- ☐ No

Selection	Range	Factory setting
LIM0 … LIM11	Menu options for limit values. Each limit value has the following properties.	-
MONITORING	Activation of limit monitoring. • ☑ ON: Limit monitoring switched on. • ☐ OFF: Limit monitoring switched off.	☐ OFF
SOURCE	Monitored data source. Almost all measured variables can be selected as the source. The short codes are assigned to the measured variables in the Appendix Value range for limit source (Page 201), in the right column "LIM SOURCE".	U L1
MODE	The comparison operators refer to the value in the "VALUE" field. • GREATER THAN • LOWER THAN	GREATER THAN
VALUE	Monitored threshold.	-
PICKUP DELAY	Delay before reporting the limit violation in seconds. The pickup delay refers to the occurrence of the limit violation or the point of exceeding the threshold defined in the "Value" field. See the figure below "Effect of pickup delay and hysteresis". 0 s ... 10 s	0 s

Selection	Range	Factory setting
HYSTERESIS	Threshold buffer. This prolongs the limit violation. The hysteresis refers to the disappearance of the limit violation or the point when the level returns below the defined threshold. 0.0% ... 20.0% The percentage refers to the threshold value in the "VALUE" field. See the figure below "Effect of pickup delay and hysteresis".	0.0%
STATUS	Indicates whether the limit value is currently violated. • ☑ Yes, violation. • ☐ No, no violation.	-
LIMIT LOGIC	Refer to the following section "LIMIT LOGIC".	-

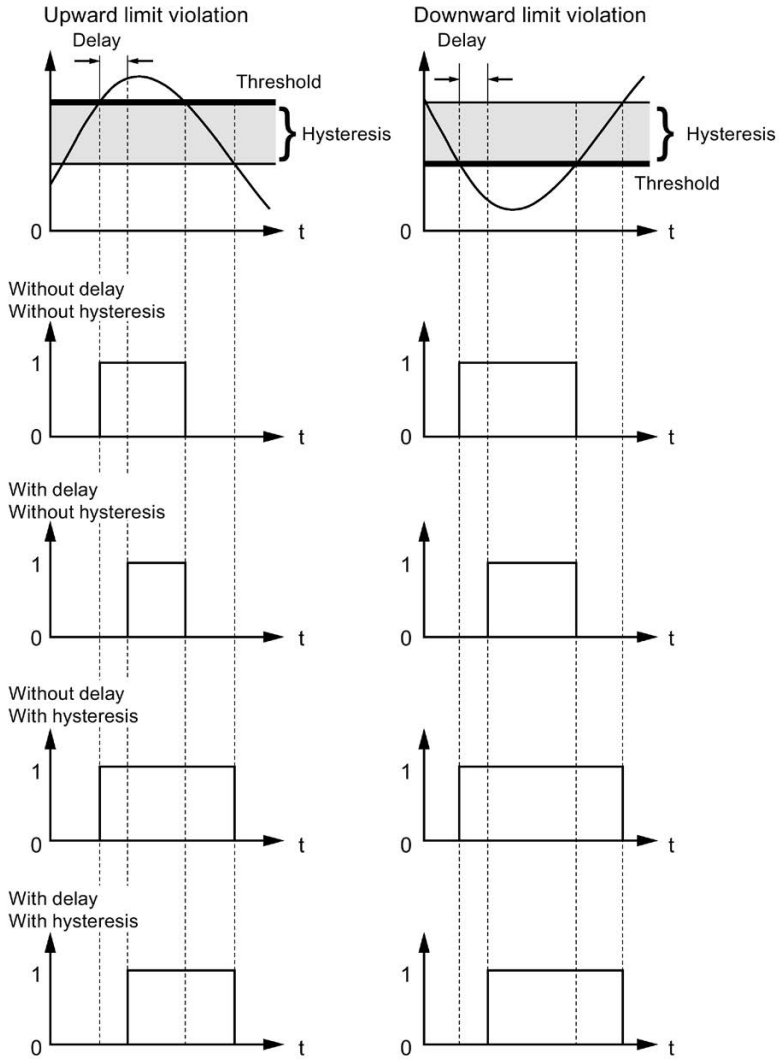

Figure 7-1 Effect of pickup delay and hysteresis on upper and lower limit violations

Limit logic

Logical truth value resulting from the combination of up to 12 limit values "LIM0" to "LIM11", taking account of the logical priority rules and allowing logical brackets.

Symbol	Description
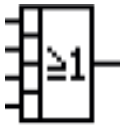	OR OR logic operation: • The output value is true if any one of the input values or several input values are true. • The output value is only false if all input values are false.
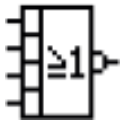	NOR NOT OR logic operation: • The output value is only true if all input values are false. • The output value is false if any one of the input values or several input values are true.
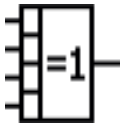	XOR EXCLUSIVE OR logic operation: The output value is only true if an odd number of inputs is true and all other inputs are false. The XOR logic is easy to understand if there are only two inputs. The output is true if the two inputs are not simultaneously true or false.
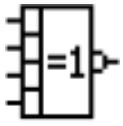	XNOR EXCLUSIVE NOT OR logic operation: The output value is only true if an even number of inputs is true and all other inputs are false. The XOR logic is easy to understand if there are only two inputs. The output is true if the two inputs are simultaneously true or false.
	Status indicator The value present at the input or the value to be output at the output is "true".
	Status indicator The value present at the input or the value to be output at the output is "false".

Universal counter

The device has two configurable universal counters with the following capabilities:

- Counting at digital inputs or outputs
  - Limit violations
  - Status changes
- Energy indications of a connected pulse encoder
  - Active energy
  - Reactive energy
- Counting of signals from various sources, e.g.
  - Water meter or
  - Gas meter

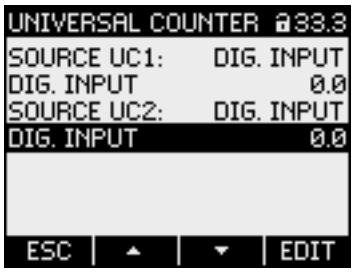

Symbol	Description
• SOURCE UNIV1 • SOURCE UNIV2	Source of the count • DEACTIVATED: Universal counter deactivated • DIG.INPUT: Digital input • DIG.OUTPUT: Digital output • LIMIT LOGIC: Limit RLO • LIM0 ... LIM11: Limit value 0 … limit value 11
DIG.INPUT	Selection of an available digital input
DIG.OUTPUT	Selection of an available digital output

Replacing the battery

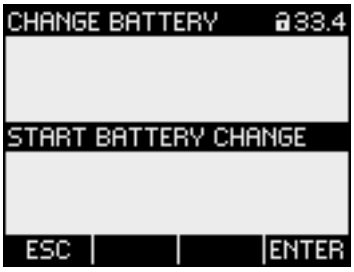

This will start data backup. The SENTRON PAC4200 copies the data from the battery-backed memory into the internal non-volatile memory.

The data does not leave the device.

The following data is stored:

- Load profile configuration
- Load profile data
- All counter values, e.g.
  - Energy
  - Daily energy
  - Operating hours
  - Process counter
  - Universal counter
  - User-defined counter
  - Alarm counter
  - Event counter
  - Configuration counter

The device indicates completion of data backup.

The following data could be lost, for instance, when the battery is replaced:

- Event log
- Min./max. values for all measured variables
- Date and time
- Sliding window demands

This data can be backed up beforehand using the software.

Reset

This resets the device settings to the instantaneous values or the factory default values.

The following groups of values can be reset:

- Maximum/minimum values
- Counters
- Universal counter
- Factory settings
- Communication parameters

Note

Restarting of the device

Resetting the last two value groups "FACTORY DEFAULTS" and "COMMUNICATION PARAM." causes the device to reboot.

Selection	Range
CLEAR MIN/MAX VALUES	Resets all minimum and maximum values to the instantaneous value.
RESET COUNTERS	Resets the following counters to 0 (zero): • Energy counter – Active energy – Reactive energy – Apparent energy • Operating hours counter
RESET UNIV. COUNTERS	Resets the configurable universal counters to 0 (zero).
RESET PULSE COUNTERS	Resets the pulse counters. This option is only available if at least one SENTRON PAC 4DI/2DO expansion module is plugged into the SENTRON PAC4200 device.
FACTORY SETTINGS	• Resets all device settings to the default values. • Clears minimum/maximum values. • Resets all counters.
COMMUNICATION PARAMETERS	Resets all communication settings to 0.0.0.0.
EXECUTE	Reset function. Resets the selected value groups.

Expansion modules

When the expansion module is mounted on the SENTRON PAC4200 Power Monitoring Device, you can enter the configuration settings for the expansion module in this menu item.

Expansion modules expand the functionality of the SENTRON PAC4200.

The expansion modules are not included in the scope of delivery. They can be ordered as options.

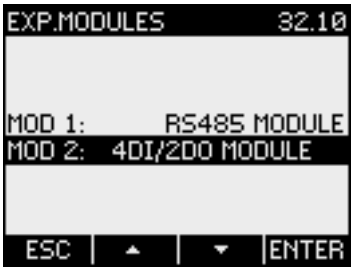

7.3 Protection against manipulation

7.3.1 Introduction

The SENTRON PAC4200 is equipped with a range of mechanisms to protect against deliberate and inadvertent device manipulation.

- Password protection
- Hardware write protection
- Device access control (IP filter)
- Configurable Modbus TCP port

The closed padlock symbol in the display title indicates whether "password protection" or "hardware write protection" is activated.

- : Device is protected against write access.
- : Device is not protected against write access.

7.3.2 Password protection

Password protection prevents write access via the device interface and the communication interfaces, in particular:

- Changing of device settings, including password
- Changing and deleting of values/parameters
- Deleting of data and memory content
- Setting and resetting of counts
- Restoring the factory settings

Reading out of measured values and memory content is still possible when password protection is active.

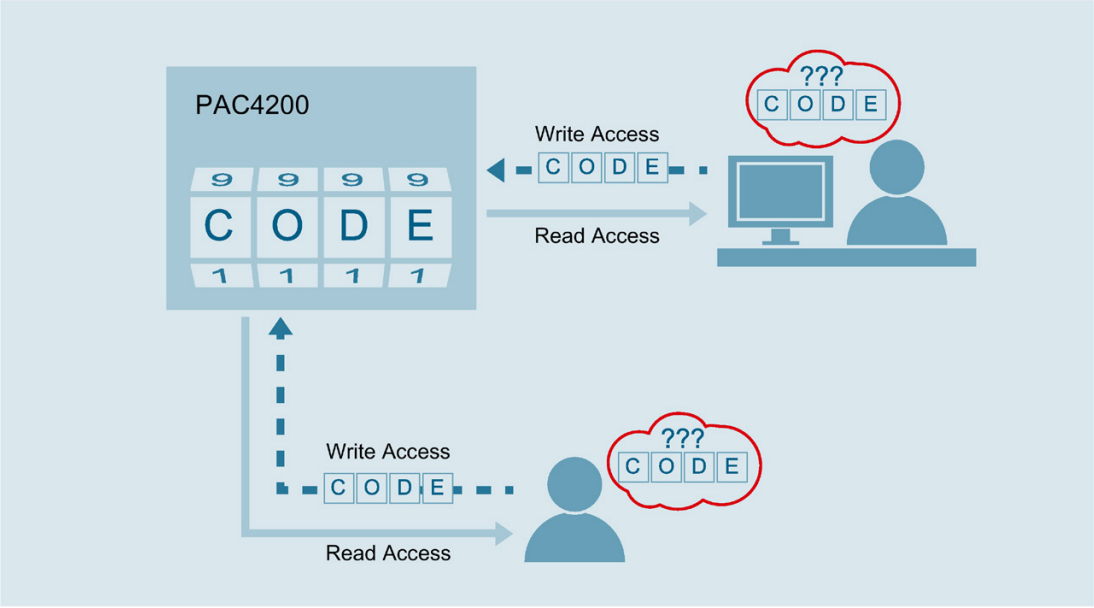

As soon as the password has been entered in the device once, the password is not requested again as long as the "SETTINGS" menu level remains active.

Password policy: four-digit number from 0000 to 9999 (default password: 0000)

If no user-specific password has been assigned, the default password must be entered when password protection is switched on. The currently valid password becomes visible on the display when password protection is switched off. The password remains saved and becomes effective again the next time password protection is switched on.

Note

Before switching on password protection, make sure that you and the group of authorized users are all in possession of the password.

If password protection is switched on, you need the password for all changes to the device settings. You also require the password to call the "PASSWORD" dialog box again in order to switch off access protection or to change the password.

Note

If you have forgotten the password, please contact Technical Support. You will receive a new password from them.

7.3.3 Hardware write protection

The hardware write protection prevents write access to the device, both via the communication interface and on the display.

In order to gain write access, the hardware write protection must be deactivated directly on the device.

The hardware write protection cannot be deactivated via a communication interface.

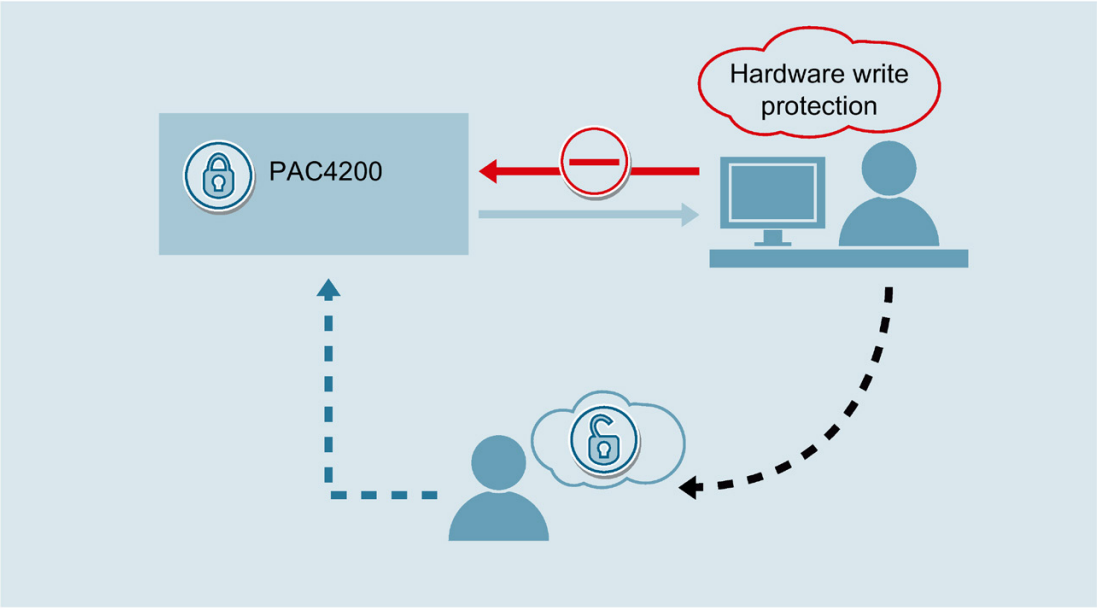

The hardware write protection can be used in two possible ways:

- Using a free digital input directly on the device or on an optional expansion module
- Protection activation via menu

Activating/deactivating hardware write protection via digital input

The hardware write protection can be activated and deactivated via the digital input of the device.

1. The digital input can be configured in the submenu "Integrated I/O" → "Digital input" of the "Settings" menu.
2. Select "Write protection" in the "Action" menu item and confirm with "OK".

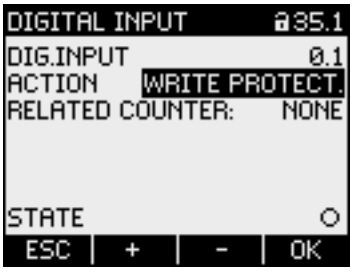

– To activate write protection, an auxiliary voltage of 12 V DC to 24 V DC must be applied to the digital input. The device is write-protected after the auxiliary voltage is removed.

– To deactivate write protection, an auxiliary voltage of 12 V DC to 24 V DC must be applied to the parameterized input. The write protection feature can now be deactivated via the menu.

As an alternative to the digital input on the device, a digital input of an optional PAC 4DI/2DO expansion module (MLFB: 7KM9200-0AB00-0AA) can also be used.

Note

Write protection remains inactive as long as the input is activated. The padlock symbol indicates the status in each settings menu.

Activating/deactivating hardware write protection via the menu

Provided the write protection has not already been activated via the digital input, you can operate the function directly on the display.

1. Select the "Advanced" submenu of the "Settings" menu.
2. The hardware write protection can be activated and deactivated in the "Write protection" menu item.

3. If the hardware write protection has already been set via digital input, information about the digital input used appears. The symbol indicates that the device is already protected via the digital input.

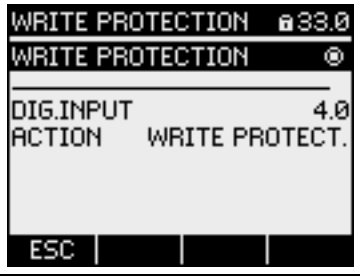

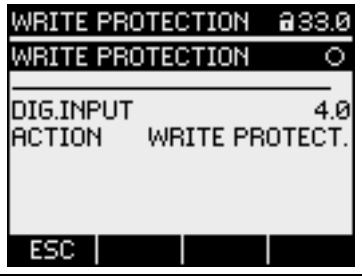

Note

It is recommended to activate the hardware write protection on the device.

7.3.4 Device access control (IP filter)

The IP filter is a configurable access protection. If the IP filter is activated, MODBUS TCP commands are only accepted if the remote terminal unit appears in the white list of the PAC4200.

The white list is a configuration table of PAC4200 in which access rights can be assigned.

The PAC4200 has five configuration tables which allow the user to define device access and access type for a specific user or group of users.

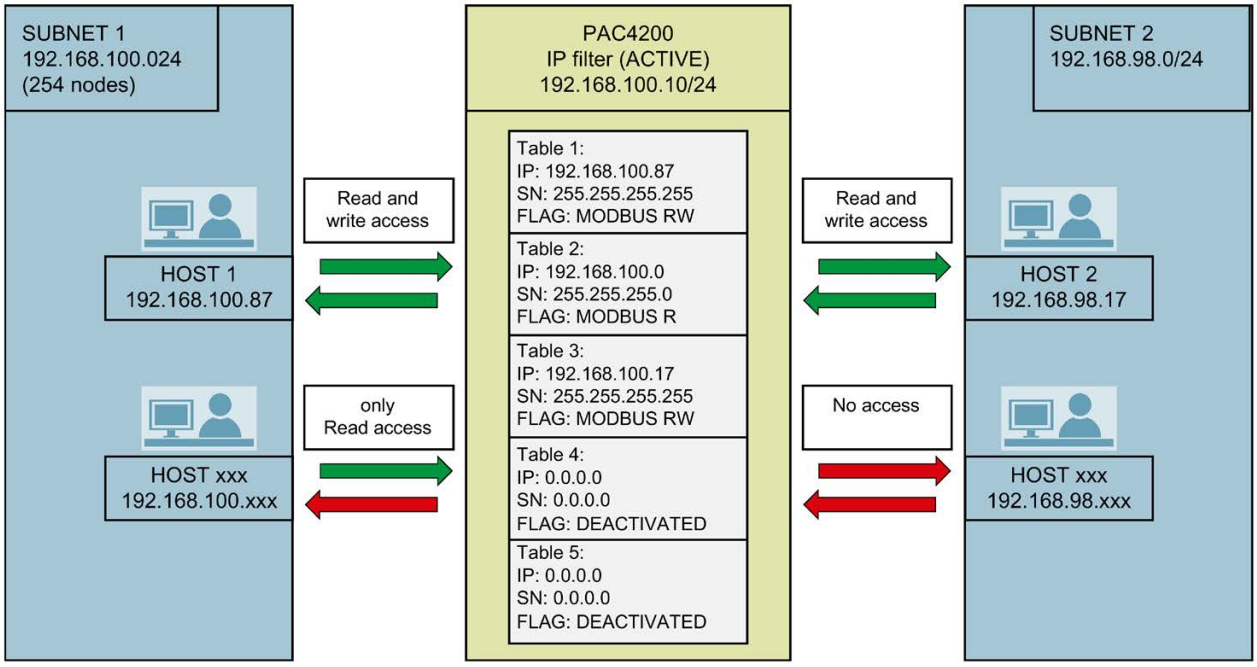

Figure 7-2 Device access control (IP filter)

Example

PAC4200 with one activated IP filter was configured as shown in the figure above.

- **Host 1** (IP: 192.168.100.87) in the subnet (192.168.100.0/24) has read and write access to the PAC4200.

  Reason: In IP filter configuration table 1, the IP address of host 1 was cleared for read and write access.

- **The other hosts** (IP: 192.168.100.xxx) in the subnet (192.168.100.0/24) only have read access to the PAC4200.

  Reason: In IP filter configuration table 2, 254 subscribers in the subnet (192.168.100.0/24) were assigned read access.

- **Host 2** (IP: 192.168.98.17) in the subnet (192.168.98.0/24) has read and write access to the PAC4200.

  Reason: In IP filter configuration table 3, the IP address of host 2 was individually cleared for read and write access.

- **The other hosts** (IP: 192.168.98.xxx) in the subnet (192.168.98.0/24) do not have access to the PAC4200.

  Reason: The subnet (192.168.98.0/24) was not cleared for access in any of the five IP filter configuration tables.

Activating/deactivating the IP filter

1. Select the "Communication" submenu of the "Settings" menu.
2. The protection feature can be activated and deactivated in the "IP filter" menu item.

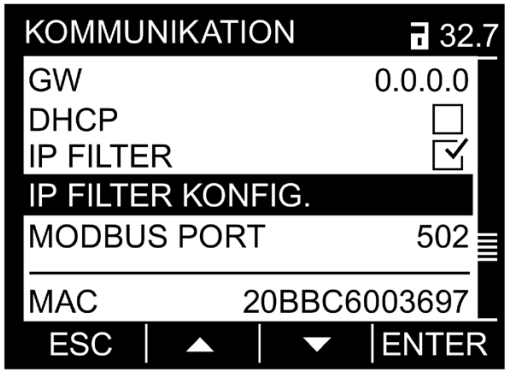

Figure 7-3 Activating/deactivating the IP filter, COMMUNICATION

3. Select the "IP FILTER CONFIG." submenu.

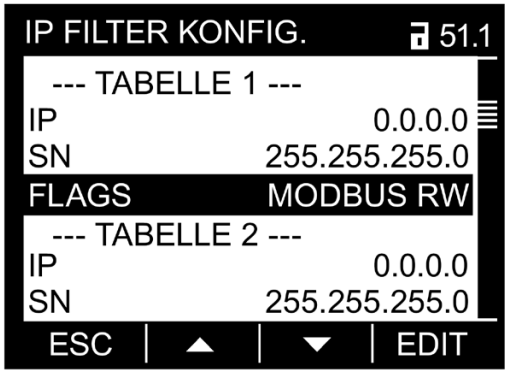

Figure 7-4 Activating/deactivating the IP filter, IP FILTER CONFIG.

4. Five configuration tables are available in the "IP FILTER CONFIG." menu item.

   You can define the following access rights and access types in the tables:

- IP: Access clearance possible for either a specific group of IP addresses or for one individual IP address.
- SN: Access clearance a specific subnet.
- FLAGS: Specification of access type
  - MODBUS R (read access)
  - MODBUS RW (read and write access)
  - DEACTIVATED (table not active)

7.3.5 Configuring the Modbus TCP port

Ports are communication channels which make it possible to access a Modbus-capable device via a network.

Standard IP ports like port 502 are often tested by port scanners. If an open port is discovered by an attacker, the device can be attacked via this port.

The SENTRON PAC4200 allows the Modbus TCP ports to be configured manually. Switching from standard port 502 to a user-defined port makes it more difficult to scan for open ports.

Configuring the Modbus TCP port

1. Select the "Communication" submenu of the "Settings" menu.
2. The port can be changed manually in the "Modbus port" menu item.

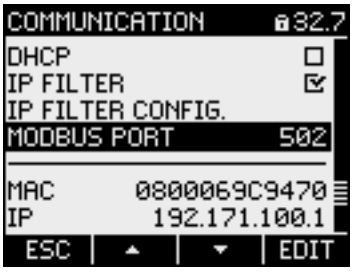

  - Default setting: 502
  - Setting the value "0" deactivates the Modbus TCP function.

Service and maintenance

8

8.1 Calibration

The device has been calibrated by the manufacturer before shipping. Recalibration is not required provided the environmental conditions are maintained.

8.2 Cleaning

Clean the display and the keypad periodically. Use a dry cloth for this.

NOTICE
Damage due to detergents Detergents can damage the device. Do not use detergents.

Note

Damage due to moisture

Moisture or wetness can affect the operating capability of the components. Make sure that no moisture or wetness can find its way into the expansion module. Use only a dry, lint-free cloth to clean the components.

8.3 Firmware update

The SENTRON PAC4200 supports firmware updates.

Use the powerconfig configuration software for firmware updates. Additional information on updating the firmware can be found in the online help for powerconfig. You can find the available firmware versions on the Internet (https://support.industry.siemens.com/cs/ww/en/ps/7KM4211-1BA00-3AA0/dl).

You can protect the update function, like all write accesses, with a password.

NOTICE
A power failure during a firmware update disables the functionality of the expansion module. The firmware update takes several minutes. To update the firmware of the expansion module, connect the SENTRON PAC4200 with the PAC4DI/2DO expansion module or the PAC PROFIBUS DP expansion module to a fail-safe power supply. If the power fails despite this security measure, try to start the firmware update of the expansion module again in *SENTRON powerconfig*.

Note

The expansion module will not work with the wrong firmware version.

It is possible that expansion modules of previous versions of SENTRON PAC4200 are not supported.

Make sure to use the SENTRON PAC4200 firmware version that supports the expansion module.

You can obtain further information on the firmware versions from Technical Support.

8.4 Replacing the battery

The battery of the SENTRON PAC4200 must be periodically replaced.

Note

No battery indicator

The SENTRON PAC4200 has no function for determining the charging status of the battery.

Service life of the battery

Refer to the information about the service life of the battery in the chapter "Technical data".

Replacement battery

Use a replacement battery that meets the technical requirements. Refer to the information in chapter Technical data (Page 127).

Note

Use only batteries tested in accordance with UL1642.

Tools

Use the following tool for replacing the battery:

- Angled pointed pliers with insulated jaws.

Procedure

Before removing a battery from the device in order to replace it with a new one, the data in the device must be backed up.

1. Select the "ADVANCED" submenu of the "SETTINGS" menu.
2. Select the "CHANGE BATTERY" menu item and press "ENTER" to confirm your selection.

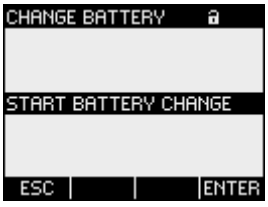

Figure 8-1 "CHANGE BATTERY"

This will start data backup. The SENTRON PAC4200 copies the data from the battery-backed memory into the internal non-volatile memory.

The data does not leave the device.

The device indicates completion of data backup.

Figure 8-2 Indication of completed data backup

3. Switch the system and the device off-circuit.

DANGER

Hazardous voltage.

Will cause death or serious injury.

Turn off and lock out all power supplying this equipment before working on this device.

4. Discharge any static from your body. Observe the ESD guidelines in the Appendix.

5. Replace the battery.

Note

Reduced service life of the battery

Grease or dirt on the contacts forms a contact transfer resistance that reduces the service life of the battery.

Hold the battery by the edges only.

NOTICE
Short-circuit of the battery Gripping the battery with metal tools will short-circuit the battery. Use insulated tools.

– The enclosure does not need to be opened in order to change the battery, as the battery compartment is accessible from the outside. Remove the battery from the battery compartment. Use angled pointed pliers for this.

– Insert the replacement battery into the battery compartment. Take note of the polarity indicated at the insertion opening of the battery compartment.

Note

Polarity of the battery

The opening of the battery compartment has the same shape as the battery. This determines the alignment of the terminals. It is not possible to insert the battery incorrectly.

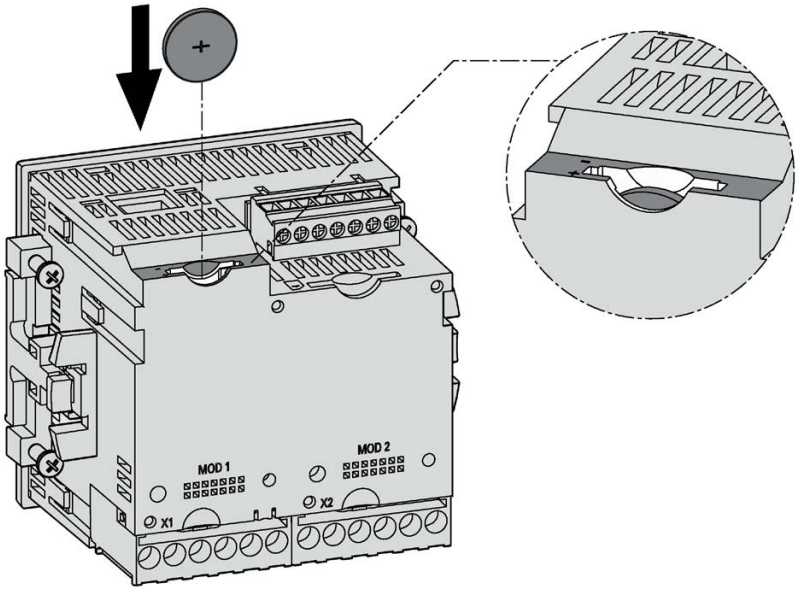

Figure 8-3 Battery change

6. Ensure the old battery is disposed of in accordance with legal requirements.

7. Start the system up again. Restore the supply voltage of the device.

   The backed-up data are available automatically.
8. Reset the clock.
9. Test the operating capability of the SENTRON PAC4200.

8.5 Repair

Procedure

Note

Loss of warranty

If you open the device, you will invalidate the Siemens warranty. Only the manufacturer is permitted to repair the device. Return faulty or damaged devices to Siemens for repair or replacement.

If the device is faulty or damaged, proceed as follows (only during the warranty period):

1. Uninstall the device; refer to chapter Deinstallation (Page 51).
2. Pack the device such that it cannot be damaged during transport.
3. Return the device to Siemens. You can obtain the address from:
   - Your Siemens sales partner
   - Technical Assistance

8.6 Disposal

- Dispose of the module in accordance with the applicable laws and regulations in your country.
- The device must not be disposed of with general domestic waste.
- Old devices must be collected and disposed of separately.

Technical data

9

9.1 Technical data

Device configuration

- 2 slots for up to 2 optional expansion modules
- 2 opto-isolated digital inputs with one shared terminal
- 2 opto-isolated digital outputs with one shared terminal
- 1 Ethernet interface, RJ45 socket for connecting to the PC or network

Measurement

Only for connection to AC voltage systems		
Measuring method		
	For voltage measurement	TRMS value measurement up to the 64th harmonic
	For current measurement	TRMS value measurement up to the 64th harmonic
Measured value acquisition		
	Energy	Contiguous (zero blind measurement)
	Current, voltage	Contiguous (zero blind measurement)
		Settable refresh time for values on the display: 330 to 3000 ms
	Waveform	Sinusoidal or distorted
	Frequency of the relative fundamental	50/60 Hz
	Measured value acquisition mode	Automatic mains frequency acquisition

Measuring inputs for voltage

Table 9- 1 Device with wide-voltage power supply

Voltage L-N	AC 3~ 400 V (+20%), max. 347 V for UL	Measuring category CAT III
Voltage L-L	AC 3~ 690 V (+20%), max. 600 V for UL	Measuring category CAT III

Table 9- 2 Device with extra-low voltage power supply

Voltage L-N	AC 3~ 289 V (+20%)	Measuring category CAT III
Voltage L-L	AC 3~ 500 V (+20%)	Measuring category CAT III

Table 9- 3 Values for devices with a wide-voltage power supply and devices with an extra-low voltage power supply

Min. measurable voltage	Voltage L-N	AC 3~ 57 V -80%
	Voltage L-L	AC 3~ 100 V 80%
Impulse withstand voltage		> 9.5 kV (1.2/50 µs)
Measuring category		Acc. to IEC/UL 61010 Part 1
Input resistance (L-N)		1.05 Mohms
Power consumption per phase		Max. 220 mW

Measuring inputs for current

Only for connection to AC power systems via external current transformers			
	Input current I_I		
		Rated current 1	AC 3~ x/1 A
		Rated current 2	AC 3~ x/5 A
	Measuring range [1] for current		10% to 120% of rated current
	Measuring range [1] for power		1 % to 120 % of rated current
	Surge withstand capability		100 A for 1 s
	Max. permissible continuous current		10 A
	Power consumption per phase		• 4 mVA at 1 A • 115 mVA at 5 A
	Zero point suppression		0 to 10% of rated current

[1] The measuring range is the range within which the accuracy data applies

Measuring accuracy

Measured variable	Accuracy class acc. to IEC 61557-12
Root-mean-square value of the voltages (L-L, L-N)	0.2
Root-mean-square value of the phase-to-phase currents and the neutral currents	0.2
Apparent power	0.5
Active power	0.2
Total reactive power (Q_{tot})	1.0
Reactive power (Q_n)	1.0
Reactive power (Q_1)	1.0
Cos φ	0.2% [1]
Power factor	2.0
Phase angle	±1° [1]
Frequency	0.1
Apparent energy	0.5
Active energy	0.2
Reactive energy	2.0
THD voltage referred to the fundamental	2.0
THD current referred to the fundamental	2.0
Voltage unbalance referred to amplitude and phase	0.5
Current unbalance referred to amplitude and phase	0.5 [1]
2nd ... 64th harmonic of the voltage referred to the fundamental	2.0
3rd ... 31st harmonic of the current referred to the fundamental	2.0

[1] The IEC 61557-12 standard does not specify any accuracy class for these variables. The specifications refer to the maximum deviation from the actual value.

When measuring with external current or voltage transformers, the accuracy of the measurement depends crucially on the quality of the transformer.

Supply voltage

Design of the power supply.		Wide-range AC/DC power supply unit
	Rated range	95 … 240 V AC (50/60 Hz) or 110 ... 340 V DC
Design of the power supply.		Extra-low voltage power supply DC [1]
	Rated range	24 V, 48 V and 60 V DC or 22 ... 65 V DC
Work area		±10% of rated range
Power consumption		
	Without expansion module	Typically 11 VA AC, 5.5 W DC
	With 2 expansion modules	Max. 32 VA AC, max. 11 W DC
Overvoltage category		CAT III

[1] Compliance with the specified impulse withstand voltage –1 kV line to line and 2 kV line to ground – according to DIN EN 61000-4-5 must be ensured by means of external protective devices.

Battery

Types	BR2032 CR2032 (not rechargeable) Approved in accordance with UL1642
Nominal voltage	3 V
Nominal discharge current	0.2 mA
Minimum permissible reverse current to the battery	5 mA
Ambient temperature	The battery must be designed for at least 70°C.
Service life	5 years under the following conditions: 2 months backup time per year at 23 °C, 10 months continuous operation per year at the maximum permissible ambient temperature.

Memory

The long-term memory is sufficient to save up to four measured variables and their extreme values every 15 minutes for 40 days.

Digital inputs

Number		2 inputs
Input voltage		
	Rated value	24 V DC
	Maximum input voltage	30 V DC (SELV or PELV supply)
	Permissible signal level for signal "0" detection	< 10 V DC
	Permissible signal level for signal "1" detection	> 19 V DC
Input current		
	For signal "1"	Typ. 4 mA (24 V)
Max. input delay		
	Signal "0" to "1"	5 ms
	Signal "1" to "0"	5 ms
Pulse rate		
	Maximum pulse rate	20 Hz

Digital outputs

Number			2 outputs
Design/function			Switching output or pulse output
Operating voltage			12 to 24 V DC, max. 30 V DC (SELV or PELV supply)
Output current			
	With "1" signal		Depends on the load and the external power supply
		Continuous load	Max. 100 mA (thermal overload protection)
		Transient overload	Max. 300 mA for 100 ms
		Resistive load	100 mA
	With "0" signal		Max. 0.2 mA
Internal resistance			55 Ω
Short-circuit protection			Yes
Overvoltage category			CAT I
Pulse output function			
	Standard for pulse emitter		Signal characteristics in accordance with IEC 62053-31
	Adjustable pulse duration		30 ms ... 500 ms
	Minimal settable time frame		10 ms
Switching function			
	Max. output delay		
	With signal "0" to "1"		5 ms
	With signal "1" to "0"		5 ms
Max. switching frequency			20 Hz

Communication

Ethernet ports		
	Number	1
	Type	RJ45 (8P8C)
	Suitable cable types	100Base-TX (CAT5) Grounding of cable required.
	Protocols supported	Modbus TCP; web server (HTTP), SNTP; DHCP
	Transfer rates	10/100 Mbit/s, autonegotiation and Auto-MDX (Medium Dependent Interface)
	Update time at the interface	200 ms for instantaneous values and energy counters. Sliding window demands are updated up to 60 times during the configured averaging time, e.g. once every second if the averaging time is set to 60 seconds.
Modbus gateway		
	Function	Modbus gateway for converting Modbus TCP to Modbus RTU
	Requirements for use	SENTRON PAC RS485 expansion module
	Number of devices that can be operated	Max. 31 without repeaters Max. 247 without repeaters
	Port number	17002 if the SENTRON PAC RS485 expansion module is operated at the "MOD1" slot 17003 if the SENTRON PAC RS485 expansion module is operated at the "MOD2" slot

Displays and controls

Display		
	Type	Monochrome, graphical LC display
	Backlit display	White, invertible display
	Resolution	128 pixels x 96 pixels
	Size (W x H)	72 mm x 54 mm
	Refresh time	0.33 s ... 3 s; adjustable
Keyboard		
	4 function keys F1 to F4 on the front	

Connection elements

Measuring inputs and supply voltage inputs				
	Screw terminals			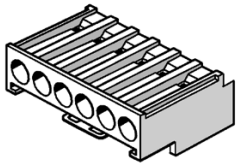
		Connection designations		IL1(°↑k, I↓), IL2(°↑k, I↓), IL3(°↑k, I↓) 1-wire connection possible V_1, V2, V3, VN, L/+, N/- 1-wire or 2-wire connection possible
		Conductor cross-section		
			Solid	• 1 x 0.5 ... 4.0 mm² AWG 1 x 20 ... 12 • 2 x 0.5 ... 2.5 mm² AWG 2 x 20 ... 14
			Finely stranded with end sleeve, without plastic sleeve	• 1 x 0.5 mm² … 2.5 mm² AWG 1 x 20 mm² … 14 • 2 x 0.5 ... 1.5 mm² AWG 2 x 20 ... 16
			Finely stranded with end sleeve, with plastic sleeve	1 x 0.5 ... 2.5 mm² AWG 1 x 20 ... 14 mm²
			TWIN end sleeve	2 x 0.5 ... 1.5 mm² AWG 2 x 20 ... 16 mm²
		Stripping length		10 mm / 0.4 in
		Connection screws		
			Tightening torque	0.8 Nm … 1.2 Nm 7 lbf in … 10.3 lbf in
		Tools		• PZ2 cal. screwdriver ISO 6789 • Pressing tool

	Ring lug terminals		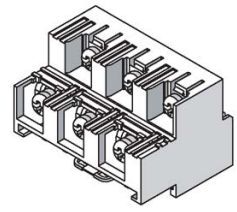		
		Connection designations	IL1(°↑k, I↓), IL2(°↑k, I↓), IL3(°↑k, I↓) V_1, V2, V3, VN, L/+, N/-		
		Dimensions of the ring lug	Dimen-sions	[mm]	[inch]
			D VA W L1 L2 L3	3 … 4 0.75 … 1.0 ≤ 8 ≤ 24 ≤ 20 ≥ 8	0.118 … 0.157 0.029 … 0.039 ≤ 0.314 ≤ 0.944 ≤ 0.787 ≥ 0.314
			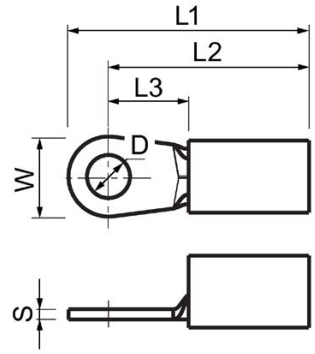		
		Connection bolt	M3 … M4	#5 … #8	
		Conductor cross-section depending on the ring lug used	1.0 mm² … 6.0 mm²	AWG 18 ... 10	
			The national standards for ring lugs must be observed, e.g. UL listed under ZMVV/7, CSA, DIN 46237, IEC 60352-2. Refer to the information from the ring lug manufacturer as well as IEC 60352-2 with regard to the creation of suitable crimp connections. The ring lugs must be mounted parallel to each other.		
		Connection screws			
		Tightening torque	• 0.8 Nm … 1.2 Nm • 7 lbf·in … 10.3 lbf·in		
		Max. vertical screwing force	• 30 Nm • 6.75 lbf		
		Tools	• PZ2 cal. screwdriver ISO 6789 • Crimping or pressing tool according to manufacturer's information for ring lugs		

Digital outputs, digital inputs				
	Screw terminal			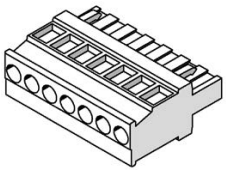
		Connection designations		⏚ , DIC, DI1, DI0, DOC, DO1, DO0
		Conductor cross-section		
			Solid	• 1 x 0.2 mm² … 2.5 mm² AWG: 1 x 24 … 14 mm² • 2 x 0.2 mm² … 1.0 mm² AWG: 2 x 24 … 18 mm²
			Finely stranded without end sleeve	• 1 x 0.2 mm² … 2.5 mm² AWG: 1 x 24 … 14 mm² • 2 x 0.2 mm² … 1.5 mm² AWG: 2 x 24 … 16 mm²
			Finely stranded with end sleeve, without plastic sleeve	• 1 x 0.25 mm² … 2.5 mm² AWG: 1 x 24 … 14 mm² • 2 x 0.25 mm² … 1.0 mm² AWG: 2 x 24 … 18 mm²
			Finely stranded with end sleeve, with plastic sleeve	1 x 0.25 mm² … 2.5 mm² AWG: 1 x 24 … 14 mm²
			Finely stranded with TWIN end sleeve, with plastic sleeve	2 x 0.5 mm² … 1.5 mm² AWG: 2 x 20 ... 16 mm²
		Stripping length		7 mm / 0.3 in
		Connection screws		
			Tightening torque	Min. 0.5 Nm / 4.4 lb-in
		Tools		• PZ1 cal. screwdriver ISO 6789 • Pressing tool
RJ45 connector				

Dimensions and weights

Type of fixing		Panel mounting to IEC 61554
Size W x H x D		96 mm x 96 mm x 82 mm
Cutout (W x H)		$92^{+0.8}$ mm x $92^{+0.8}$ mm
Overall depth		
	Without expansion module	77 mm
	With expansion modules	99 mm
Permissible switching panel thickness for installation		Max. 4 mm
Mounting position		Vertical
Weight		
	Device without packaging	Approx. 450 g
	Device including packaging	Approx. 550 g

Degree of protection and safety class

Safety class			II
Degree of protection according to IEC 60529			
	Device front		IP65 Type 5 Enclosure acc. to UL50
	Device rear		
		Device with screw terminal	IP20
		Device with ring lug terminal	IP10
	If higher degree of protection requirements are placed on the application engineering, the customer must take suitable measures.		

Approvals

Symbol	Approval
	CE conformity Applied directives and standards can be found in the EU Declaration of Conformity.
	Approval for Australia and New Zealand Regulatory Compliance Mark
	Approval for Eurasian Economic Union
	CT verification marking (Russia) Products with this marking have obtained a metrological certificate. This confirms conformity with the legal provisions pertaining to technical regulation in the Russian Federation.
	Approvals for the USA and Canada Products with this marking comply with both Canadian (CSA) and American (UL) requirements.
	Approval for Korea

You can download the relevant certificates from the Siemens Support website: (https://support.industry.siemens.com/cs/ww/en/ps/7KM4211-1BA00-3AA0/cert)

9.2 Labeling

Labels on the housing of the SENTRON PAC4200

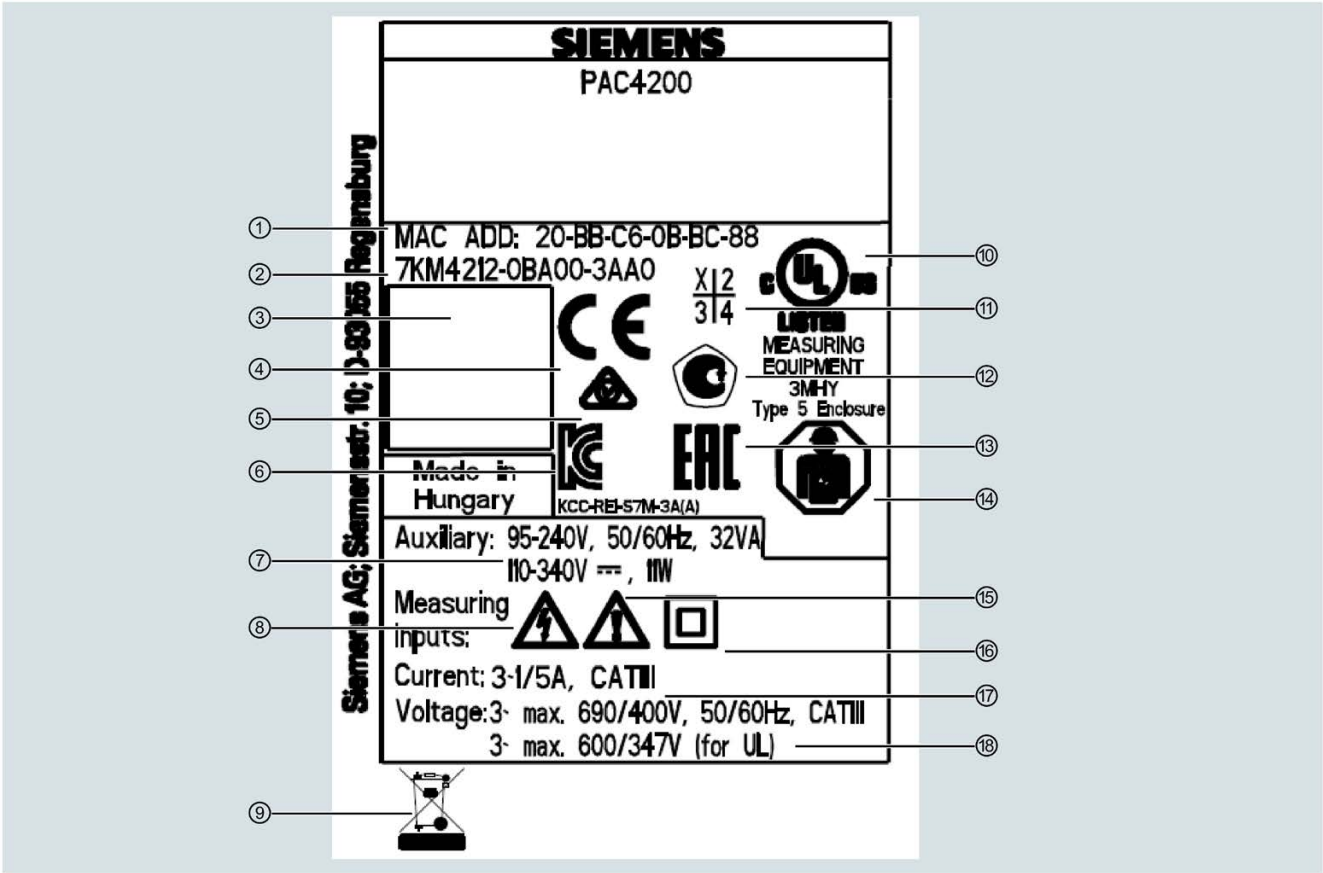

① MAC address
② Article number
③ 2D code (serial number of the device)
④ CE marking (European Union)
⑤ RCM test symbol (Australia and New Zealand)
⑥ KCC test symbol (Korea)
⑦ Voltage supply to the device
⑧ Risk of electric shock
⑨ The device must not be disposed of with general domestic waste.
⑩ Products with this mark comply with both the Canadian (CSA) and the American (UL) requirements
⑪ Product version ID
⑫ CT verification marking (Russia). Products with this marking have obtained a metrological certificate. This confirms conformity with the legal provisions pertaining to technical regulation in the Russian Federation.
⑬ EAC marking (Eurasian Economic Union)
⑭ Electrical installation and maintenance by qualified personnel only
⑮ General warning symbol

⑯ Protective insulation - class II device
⑰ Data about measuring inputs for current
⑱ Data about measuring inputs for voltage

Dimensional drawings

10

Note: All dimensions in mm.

Panel cutout

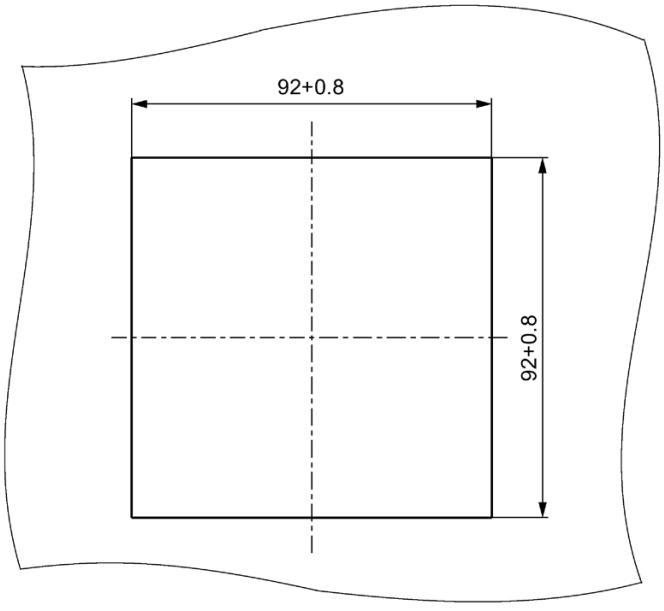

Figure 10-1 Panel cutout

Frame dimensions

Device with screw terminals

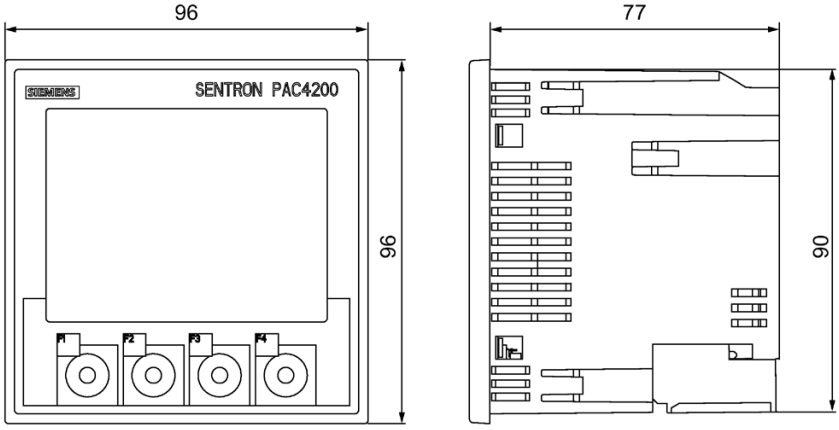

Figure 10-2 Frame dimensions with optional PAC PROFIBUS DP expansion module connected, device with screw terminals

Device with ring lug terminals

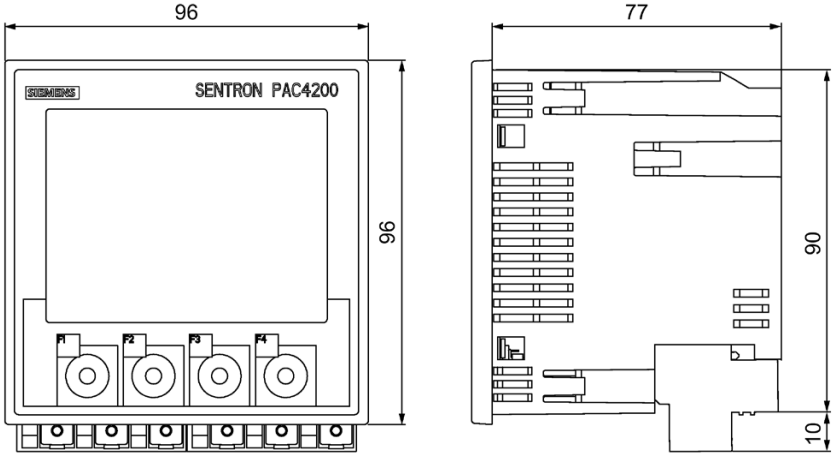

Figure 10-3 Frame dimensions with optional PAC PROFIBUS DP expansion module connected, device with ring lug terminals

Clearance dimensions

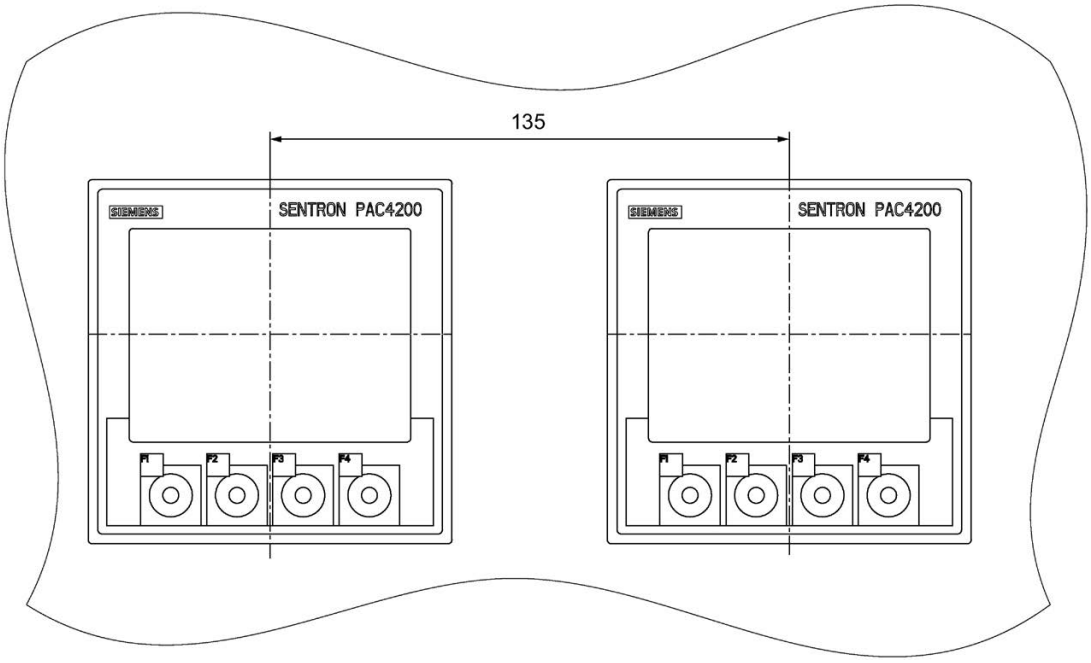

Figure 10-4 Side-by-side installation

Clearances

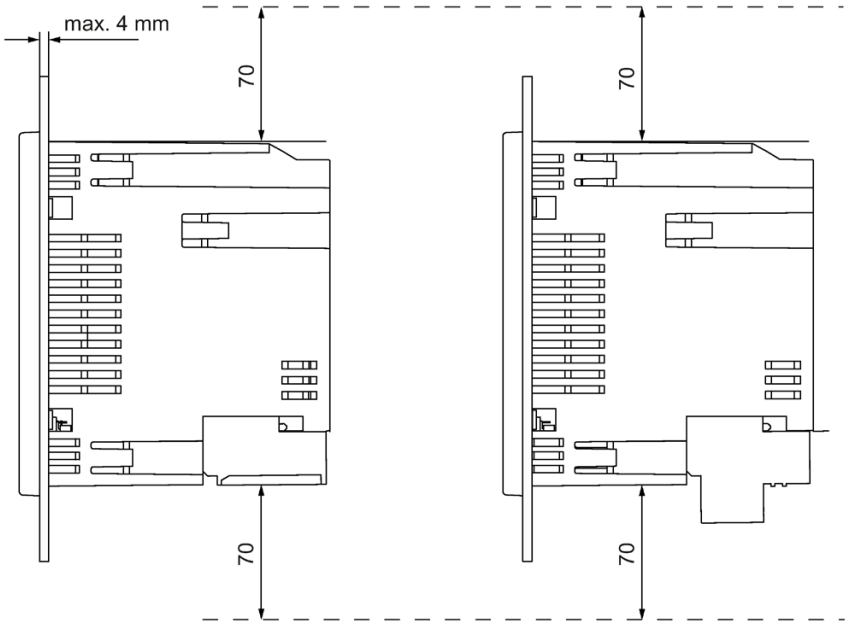

Figure 10-5 Clearances, device with screw terminal (on the left), device with ring lug terminal (on the right)

The clearances specified must be maintained for cable outlets and ventilation.

Appendix A

A.1 Load profile

Additional information about the load profile.

The following flags are part of the load profile. The flags are written per period.

Flag	Value	Meaning	
UNCERTAIN	TRUE	Exception	Load profile values are uncertain
	FALSE	Normal case	Load profile values are certain
AUXILIARY_VOLTAGE_FAILED	TRUE	Exception	The demand period was ended prematurely owing to the failure of the supply voltage
	FALSE	Normal case	
RESYNCHRONIZED	TRUE	Exception	The demand period was ended prematurely owing to a resynchronization or the time is uncertain.
	FALSE	Normal case	

A.2 Modbus

You can access the following measured variables:

- Via the Ethernet interface with the Modbus TCP protocol
- Via the PAC RS485 expansion module with the Modbus RTU protocol

Further information

You can find further details about the PAC RS485 expansion module and Modus RTU in the "PAC RS485 Expansion Module" manual.

A.2.1 Measured variables without a time stamp with the function codes 0x03 and 0x04

Addressing the measured variables without a time stamp

The SENTRON PAC4200 Power Monitoring Device provides measured variables with or without a time stamp.

Note

Error in the case of inconsistent access to measured values

Please ensure the start offset of the register is correct when making **read accesses**.

Please ensure the start offset and the number of registers are correct when making **write accesses**.

If a value consists of two registers, a read command applied in the second register, for example, will generate an error code. The SENTRON PAC4200 will also output an error code if, for example, a write operation ends in the middle of a multi-register value.

Table A- 1 Measured variables available without a time stamp

Offset	Number of registers	Name	Format	Unit	Value range	Access
1	2	Voltage L1-N	Float	V	-	R
3	2	Voltage L2-N	Float	V	-	R
5	2	Voltage L3-N	Float	V	-	R
7	2	Voltage L1-L2	Float	V	-	R
9	2	Voltage L2-L3	Float	V	-	R
11	2	Voltage L3-L1	Float	V	-	R
13	2	Current L1	Float	A	-	R
15	2	Current L2	Float	A	-	R
17	2	Current L3	Float	A	-	R
19	2	Apparent power L1	Float	VA	-	R
21	2	Apparent power L2	Float	VA	-	R
23	2	Apparent power L3	Float	VA	-	R
25	2	Active power L1	Float	W	-	R
27	2	Active power L2	Float	W	-	R
29	2	Active power L3	Float	W	-	R
31	2	Reactive Power L1 (Qn)	Float	VAR	-	R
33	2	Reactive power L2 (Qn)	Float	VAR	-	R
35	2	Reactive power L3 (Qn)	Float	VAR	-	R
37	2	Power factor L1	Float	-	0 … 1	R
39	2	Power factor L2	Float	-	0 … 1	R
41	2	Power factor L3	Float	-	0 … 1	R

Offset	Number of registers	Name	Format	Unit	Value range	Access
43	2	THD voltage L1-L2	Float	%	0 … 100	R
45	2	THD voltage L2-L3	Float	%	0 … 100	R
47	2	THD voltage L3-L1	Float	%	0 … 100	R
49	2	Reserve	-	-	-	R
51	2	Reserve	-	-	-	R
53	2	Reserve	-	-	-	R
55	2	Line Frequency	Float	Hz	45 … 65	R
57	2	3-phase average voltage L-N	Float	V	-	R
59	2	3-phase average voltage L-L	Float	V	-	R
61	2	3-Phase Average Current L-L	Float	A	-	R
63	2	Total Apparent Power	Float	VA	-	R
65	2	Total Active Power	Float	W	-	R
67	2	Total Reactive Power (Qn)	Float	VAR	-	R
69	2	Total Power Factor	Float	-	-	R
71	2	Amplitude Unbalance Voltage	Float	%	0 … 100	R
73	2	Amplitude Unbalance Current	Float	%	0 … 100	R
75	2	Maximum voltage L1-N	Float	V	-	R
77	2	Maximum voltage L2-N	Float	V	-	R
79	2	Maximum voltage L3-N	Float	V	-	R
81	2	Maximum voltage L1-L2	Float	V	-	R
83	2	Maximum voltage L2-L3	Float	V	-	R
85	2	Maximum voltage L3-L1	Float	V	-	R
87	2	Maximum Current L1	Float	A	-	R
89	2	Maximum Current L2	Float	A	-	R
91	2	Maximum Current L3	Float	A	-	R
93	2	Maximum Apparent Power L1	Float	VA	-	R
95	2	Maximum Apparent Power L2	Float	VA	-	R
97	2	Maximum Apparent Power L3	Float	VA	-	R
99	2	Maximum Active Power L1	Float	W	-	R
101	2	Maximum Active Power L2	Float	W	-	R
103	2	Maximum Active Power L3	Float	W	-	R
105	2	Maximum Reactive Power L1 (Qn)	Float	VAR	-	R
107	2	Maximum Reactive Power L2 (Qn)	Float	VAR	-	R
109	2	Maximum Reactive Power L3 (Qn)	Float	VAR	-	R
111	2	Maximum Power Factor L1	Float	-	0 … 1	R
113	2	Maximum Power Factor L2	Float	-	0 … 1	R
115	2	Maximum Power Factor L3	Float	-	0 … 1	R
117	2	Maximum THD Voltage L1-L2	Float	%	0 … 100	R
119	2	Maximum THD Voltage L2-L3	Float	%	0 … 100	R
121	2	Maximum THD Voltage L3-L1	Float	%	0 … 100	R
123	2	Reserve	-	-	-	

Offset	Number of registers	Name	Format	Unit	Value range	Access
125	2	Reserve	-	-	-	
127	2	Reserve	-	-	-	
129	2	Maximum Line Frequency	Float	Hz	45 … 65	R
131	2	Maximum 3-Phase Average Voltage L-N	Float	V	-	R
133	2	Maximum 3-Phase Average Voltage L-L	Float	V	-	R
135	2	Maximum 3-Phase Average Voltage L-L	Float	A	-	R
137	2	Maximum Total Apparent Power	Float	VA	-	R
139	2	Maximum Total Active Power	Float	W	-	R
141	2	Maximum Total Reactive Power (Qn)	Float	VAR	-	R
143	2	Maximum Total Power Factor	Float	-	-	R
145	2	Minimum voltage L1-N	Float	V	-	R
147	2	Minimum voltage L2 -N	Float	V	-	R
149	2	Minimum Voltage L3-N	Float	V	-	R
151	2	Minimum voltage L1-L2	Float	V	-	R
153	2	Minimum Voltage L2-L3	Float	V	-	R
155	2	Minimum Voltage L3-L1	Float	V	-	R
157	2	Minimum Current L1	Float	A	-	R
159	2	Minimum Current L2	Float	A	-	R
161	2	Minimum Current L3	Float	A	-	R
163	2	Minimum Apparent Power L1	Float	VA	-	R
165	2	Minimum Apparent Power L2	Float	VA	-	R
167	2	Minimum Apparent Power L3	Float	VA	-	R
169	2	Minimum Active Power L1	Float	W	-	R
171	2	Minimum Active Power L2	Float	W	-	R
173	2	Minimum Active Power L3	Float	W	-	R
175	2	Minimum Reactive Power L1 (Qn)	Float	VAR	-	R
177	2	Minimum Reactive Power L2 (Qn)	Float	VAR	-	R
179	2	Minimum Reactive Power L3 (Qn)	Float	VAR	-	R
181	2	Minimum Power Factor L1	Float	-	0 … 1	R
183	2	Minimum Power Factor L2	Float	-	0 … 1	R
185	2	Minimum Power Factor L3	Float	-	0 … 1	R
187	2	Minimum Line Frequency	Float	Hz	45 … 65	R
189	2	Minimum 3-Phase Average Voltage L-N	Float	V	-	R
191	2	Minimum 3-Phase Average Voltage L-L	Float	V	-	R
193	2	Minimum 3-Phase Average Current L-L	Float	A	-	R
195	2	Minimum Total Apparent Power	Float	VA	-	R
197	2	Minimum Total Active Power	Float	W	-	R

Offset	Number of registers	Name	Format	Unit	Value range	Access
199	2	Minimum Total Reactive Power (VARn)	Float	VAR	-	R
201	2	Minimum Total Power Factor	Float	VAR	-	R
203	2	Limit Violations*	Unsigned long	-	Byte 3 Bit 0 Limit 0	R
					Byte 3 Bit 1 Limit 1	
					Byte 3 Bit 2 Limit 2	
					Byte 3 Bit 3 Limit 3	
					Byte 3 Bit 4 Limit 4	
					Byte 3 Bit 5 Limit 5	
					Byte 3 Bit 6 Limit 6	
					Byte 3 Bit 7 Limit 7	
					Byte 2 Bit 0 Limit 8	
					Byte 2 Bit 1 Limit 9	
					Byte 2 Bit 2 Limit 10	
					Byte 2 Bit 3 Limit 11	
					Byte 0 Bit 0 Limit logic	
					Byte 0 Bit 1 Logic result 1 of limits at inputs 0 ... 3	
					Byte 0 Bit 2 Logic result 2 of limits at inputs 4 ... 7	
					Byte 0 Bit 3 Logic result 3 of limits at inputs 8 ... 11	
					Byte 0 Bit 4 Logic result 4 of limits at inputs 12 ... 15	
205	2	PMD Diagnostics and Status*	Unsigned long	-	Byte 0 System status	R
					Byte 1 Device status	
					Byte 2 Device diagnostics	
					Byte 3 Component diagnostics	
207	2	Digital Outputs* Status	Unsigned long	-	Byte 3 Bit 0 Output 0	R
					Byte 3 Bit 1 Output 1	
209	2	Digital Inputs* Status	Unsigned long	-	Byte 3 Bit 0 Input 0	R
					Byte 3 Bit 1 Input 1	
211	2	Active Tariff	Unsigned long	-	0 = Tariff 1	R

Offset	Number of registers	Name	Format	Unit	Value range	Access
					1 = Tariff 2	
213	2	Operating hours counter[2]	Unsigned long	s	0 … 999999999	RW
215	2	Universal counter[2]	Unsigned long	-	0 … 999999999	RW
217	2	Relevant Parameter Changes Counter	Unsigned long	-	-	R
219	2	Counter All Parameter Changes	Unsigned long	-	-	R
221	2	Counter Limit Violations	Unsigned long	-	-	R
223	2	Event Counter	Unsigned long	-	-	R
225	2	Alarm Counter	Unsigned long	-	-	R
227	2	Load Profile Counter	Unsigned long	-	-	R
229	2	Misc. Counter	Unsigned long	-	-	R
231	2	Status Digital Outputs Module 1[1)]	Unsigned long	-	Byte 3 Bit 0 Output 0 Byte 3 Bit 1 Output 1	R
233	2	Status Digital Inputs Module 1[1)]	Unsigned long	-	Byte 3 Bit 0 Input 0 Byte 3 Bit 1 Input 1	R
235	2	Status Digital Outputs Module 2[1)]	Unsigned long	-	Byte 3 Bit 0 Output 0 Byte 3 Bit 1 Output 1	R
237	2	Status Digital Inputs Module 2[1)]	Unsigned long	-	Byte 3 Bit 0 Input 0 Byte 3 Bit 1 Input 1	R
243	2	Cos φ L1	Float	-	-	R
245	2	Cos φ L2	Float	-	-	R
247	2	Cos φ L3	Float	-	-	R
249	2	Displacement Angle L1	Float	°	-	R
251	2	Displacement Angle L2	Float	°	-	R
253	2	Displacement Angle L3	Float	°	-	R
255	2	Phase Angle L1-L1	Float	°	-	R
257	2	Phase Angle L1- L2	Float	°	-	R
259	2	Phase Angle L1- L3	Float	°	-	R
261	2	THD voltage L1	Float	%	0 … 100	R
263	2	THD voltage L2	Float	%	0 … 100	R
265	2	THD voltage L3	Float	%	0 … 100	R
267	2	THD current L1	Float	%	0 … 100	R
269	2	THD current L2	Float	%	0 … 100	R
271	2	THD current L3	Float	%	0 … 100	R
273	2	Distortion current L1	Float	A	-	R
275	2	Distortion current L2	Float	A	-	R
277	2	Distortion current L3	Float	A	-	R
279	2	Total Reactive Power L1 (Qtot)	Float	VAR	-	R
281	2	Total Reactive Power L2 (Qtot)	Float	VAR	-	R

Offset	Number of registers	Name	Format	Unit	Value range	Access
283	2	Total Reactive Power L3 (Qtot)	Float	VAR	-	R
285	2	Reactive power L1 (Q1)	Float	VAR	-	R
287	2	Reactive power L1 (Q1)	Float	VAR	-	R
289	2	Reactive power L1 (Q1)	Float	VAR	-	R
291	2	Unbalance Voltage	Float	%	0 … 100	R
293	2	Unbalance Current	Float	%	0 … 100	R
295	2	Neutral Current	Float	A	-	R
297	2	Total Reactive Power (Qtot)	Float	VAR	-	R
299	2	Total Reactive Power (VAR1)	Float	VAR	-	R
301	2	Sliding Window Demand Voltage L1-N	Float	V	-	R
303	2	Sliding Window Demand Voltage L2-N	Float	V	-	R
305	2	Sliding Window Demand Voltage L3-N	Float	V	-	R
307	2	Sliding Window Demand Voltage L1-L2	Float	V	-	R
309	2	Sliding Window Demand Voltage L2-L3	Float	V	-	R
311	2	Sliding Window Demand Voltage L3-L1	Float	V	-	R
313	2	Sliding Window Demand Current L1	Float	A	-	R
315	2	Sliding Window Demand Current L2	Float	A	-	R
317	2	Sliding Window Demand Current L3	Float	A	-	R
319	2	Sliding Window Demand Apparent Power L1	Float	VA	-	R
321	2	Sliding Window Demand Apparent Power L2	Float	VA	-	R
323	2	Sliding Window Demand Apparent Power L3	Float	VA	-	R
325	2	Sliding Window Demand Active Power L1	Float	W	-	R
327	2	Sliding Window Demand Active Power L2	Float	W	-	R
329	2	Sliding Window Demand Active Power L3	Float	W	-	R
331	2	Sliding Window Demand Reactive Power L1 (Qn)	Float	VAR	-	R
333	2	Sliding Window Demand Reactive Power L2 (Qn)	Float	VAR	-	R
335	2	Sliding Window Demand Reactive Power L3 (Qn)	Float	VAR	-	R
337	2	Sliding Window Demand Total Reactive Power L1 (Qtot)	Float	VAR	-	R
339	2	Sliding Window Demand Total Reactive Power L2 (Qtot)	Float	VAR	-	R
341	2	Sliding Window Demand Total Reactive Power L3 (Qtot)	Float	VAR	-	R

Offset	Number of registers	Name	Format	Unit	Value range	Access
343	2	Sliding Window Demand Reactive Power L1 (Q1)	Float	VAR	-	R
345	2	Sliding Window Demand Reactive Power L2 (Q1)	Float	VAR	-	R
347	2	Sliding Window Demand Reactive Power L3 (Q1)	Float	VAR	-	R
349	2	Sliding Window Demand Power Factor L1	Float	-	0 … 1	R
351	2	Sliding Window Demand Power Factor L2	Float	-	0 … 1	R
353	2	Sliding Window Demand Power Factor L3	Float	-	0 … 1	R
355	2	Sliding Window Demand Total Apparent Power	Float	VA	-	R
357	2	Sliding Window Demand Total Active Power	Float	W	-	R
359	2	Sliding Window Demand Total Reactive Power (Qn)	Float	VAR	-	R
361	2	Sliding Window Demand Total Reactive Power (Qtot)	Float	VAR	-	R
363	2	Sliding Window Demand Total Reactive Power (Q1)	Float	VAR	-	R
365	2	Sliding Window Demand Total Power Factor	Float	-	-	R
367	2	Sliding Window Demand Neutral Current	Float	A	-	R
369	2	Process operating hours counter[2)]	Unsigned long	s	0 … 999 999 999	RW
371	2	Universal counter 2[2)]	Unsigned long	-	0 … 999 999 999	RW
373	2	Pulse counter 0[2)]	Unsigned long	-	0 … 999 999 999	RW
375	2	Pulse counter 02[2)]	Unsigned long	-	0 … 999 999 999	RW
377	2	Pulse counter 03[2)]	Unsigned long	-	0 … 999 999 999	RW
379	2	Pulse counter 04[2)]	Unsigned long	-	0 … 999 999 999	RW
381	2	Pulse counter 05[2)]	Unsigned long	-	0 … 999 999 999	RW
383	2	Pulse counter 06[2)]	Unsigned long	-	0 … 999 999 999	RW
385	2	Pulse counter 07[2)]	Unsigned long	-	0 … 999 999 999	RW
387	2	Pulse counter 08[2)]	Unsigned long	-	0 … 999 999 999	RW
389	2	Pulse counter 09[2)]	Unsigned long	-	0 … 999 999 999	RW
391	2	Pulse counter 10[2)]	Unsigned long	-	0 … 999 999 999	RW

1) The following tables contain further details of all the measured variables indicated by this superscript.

2) You can additionally use the Modbus function code 0x10 on all measured variables indicated by this superscript.

Table A- 2 Meaning of the abbreviations in the "Access" column

Abbreviation	Meaning
R	Read access
W	Write access
RW	Read and write access

See also

Structure – Digital inputs status and digital outputs status with the function codes 0x01 and 0x02 (Page 153)

Structure – Limit values with the function codes 0x01 and 0x02 (Page 154)

Structure – PMD diagnostics and status with the function codes 0x03 and 0x04 (Page 155)

A.2.2 Structure – Digital inputs status and digital outputs status with the function codes 0x01 and 0x02

The following are available via MODBUS:

- "Digital Inputs Status"
- "Digital Outputs Status"

Input status and output status of the SENTRON PAC4200 Power Monitoring Device

You can use the function codes 0x05 and 0x0F on the digital outputs in addition to the function codes 0x03 and 0x04.

Table A- 3 Structure - Digital Inputs Status and Digital Outputs Status

Name	Length	Status	Byte	Bit	Bit mask	Access
Digital outputs status	32 bits	DO 0.0	3	0	0x00000001	R
Digital outputs status	32 bits	DO 0.1	3	1	0x00000010	R
Digital inputs status	32 bits	DI 0.0	3	0	0x00000001	R
Digital inputs status	32 bits	DI 0.1	3	1	0x00000010	R

Table A- 4 Structure - Digital inputs status and digital outputs status for a SENTRON PAC 4DI/2DO expansion module in slot MOD 1

Name	Length	Status	Byte	Bit	Bit mask	Access
Digital outputs status	32 bits	DO 4.0	3	0	0x00000001	R
Digital outputs status	32 bits	DO 4.1	3	1	0x00000010	R
Digital inputs status	32 bits	DI 4.0	3	0	0x00000001	R
Digital inputs status	32 bits	DI 4.1	3	1	0x00000010	R
Digital inputs status	32 bits	DI 4.2	3	2	0x00000100	R
Digital inputs status	32 bits	DI 4.3	3	3	0x00001000	R

Table A- 5 Structure - Digital inputs status and digital outputs status for a SENTRON PAC 4DI/2DO expansion module in slot MOD 2

Name	Length	Status	Byte	Bit	Bit mask	Access
Digital outputs status	32 bits	DO 8.0	3	0	0x00000001	R
Digital outputs status	32 bits	DO 8.1	3	1	0x00000010	R
Digital inputs status	32 bits	DI 8.0	3	0	0x00000001	R
Digital inputs status	32 bits	DI 8.1	3	1	0x00000010	R
Digital inputs status	32 bits	DI 8.2	3	2	0x00000100	R
Digital inputs status	32 bits	DI 8.3	3	3	0x00001000	R

See also

Measured variables without a time stamp with the function codes 0x03 and 0x04 (Page 146)

A.2.3 Structure – Limit values with the function codes 0x01 and 0x02

Structure of the limit values

Table A- 6 Modbus offset 203, register 2: Limit violations

Byte	Bit	Status	Bit mask	Value range	Access
3	0	Limit 0	0x00000001	0 = No limit violation 1 = Limit violated	R
3	1	Limit 1	0x00000002		R
3	2	Limit 2	0x00000004		R
3	3	Limit 3	0x00000008		R
3	4	Limit 4	0x00000010		R
3	5	Limit 5	0x00000020		R
3	6	Limit 6	0x00000040		R
3	7	Limit 7	0x00000080		R
2	0	Limit 8	0x00000100		R
2	1	Limit 9	0x00000200		R
2	2	Limit 10	0x00000400		R
2	3	Limit 11	0x00000800		R
0	0	Limit logic	0x01000000		R
0	1	Function block 1 at logic inputs 1 ... 4	0x02000000		R
0	2	Function block 2 at logic inputs 1 ... 4	0x04000000		R
0	3	Function block 3 at logic inputs 1 ... 4	0x08000000		R
0	4	Function block 4 at logic inputs 1 ... 4	0x10000000		R

See also

Measured variables without a time stamp with the function codes 0x03 and 0x04 (Page 146)

A.2.4 Structure – PMD diagnostics and status with the function codes 0x03 and 0x04

Design

Table A- 7 Overview of status and diagnostics bytes

Byte	Meaning
0	System status
1	Device status
2	Device diagnostics
3	Component diagnostics

Table A- 8 Modbus offset 205, tab 2: Structure of PMD diagnostics and status

Byte	Bit	Device status	Type	Bit mask	Value range	Access
0	0	No synchronization pulse	Status	0x01000000	0 = not active 1 = active	R
0	1	Device Configuration menu is active	Status	0x02000000		R
0	2	Voltage out of range	Status	0x04000000		R
0	3	Current out of range	Status	0x08000000		R
0	4	Device time undefined	Status	0x10000000		R
0	6	Hardware write protection is active	Status	0x40000000		R
1	0	Module slot 1	Status	0x00010000		R
1	1	Maximum pulse rate exceeded	Status	0x00020000		R
1	2	Module slot 2	Status	0x00040000		R
1	4	Process counter active	Status	0x00100000		R
2	0	Basic configuration changed[1) 2)]	saving	0x00000100		RW
2	1	Upper or lower limit violation[1) 2)]	saving	0x00000200		RW
2	2	Maximum pulse rate exceeded[1) 2)]	saving	0x00000400		RW
2	3	Device has rebooted[1) 2)]	saving	0x00000800		RW
2	4	Energy counters reset[1) 2)]	saving	0x00001000		RW
2	5	Power quality	saving	0x00002000		RW
3	0	Bit 0 Slot 1 Parameters changed[2)]	saving	0x00000001		RW
3	1	Bit 1 Slot 1 IMDATA changed[2)]	saving	0x00000002		RW
3	2	Bit 2 Slot 1 Firmware update active[2)]	saving	0x00000004		RW
3	3	Bit 3 Firmware data block available[2)]	saving	0x00000008		RW
3	4	Bit 4 Bootloader update flag[2)]	saving	0x00000010		RW
3	5	Bit 5 Slot 2 Firmware update active[2)]	saving	0x00000020		RW
3	6	Bit 6 Slot 2 Parameters changed[2)]	saving	0x00000040		RW
3	7	Bit 7 Slot 2 IMDATA changed[2)]	saving	0x00000080		RW

1) Only these device states are to be acknowledged.

2) You can use the function codes 0x05 and 0x0F here in addition to the function codes 0x01 and 0x02.

See also

Measured variables without a time stamp with the function codes 0x03 and 0x04 (Page 146)
Additional information about the load profile data (Page 30)

A.2.5 Measured variables for the load profile with the function codes 0x03 and 0x04

Addressing the measured variables with a time stamp

The current period is the last completed period.
The instantaneous period is the period still in progress and has not yet been completed.

Table A- 9 Measured variables available with a time stamp

Offset	Number of registers	Name	Format	Unit	Value range	Access
479	2	Total power factor import in the current period	Float	-	-	R
481	2	Total power factor export in the current period	Float	-	-	R
483	4	Time stamp for the current period	Time stamp	-	-	R
489	2	Demand apparent power in the current period	Float	VA	-	R
491	2	Demand active power import in the current period	Float	W	-	R
493	2	Demand reactive power import in the current period	Float	VAR	-	R
495	2	Demand active power export in the current period	Float	W	-	R
497	2	Demand reactive power export in the current period	Float	VAR	-	R
499	2	Cumulated apparent power in the current period	Float	VA	-	R
501	2	Cumulated active power import in the current period	Float	W	-	R
503	2	Cumulated reactive power import in the current period	Float	VAR	-	R
505	2	Cumulated active power export in the current period	Float	W	-	R
507	2	Cumulated reactive power export in the current period	Float	VAR	-	R
509	2	Maximum active power in the current period	Float	W	-	R
511	2	Minimum active power in the current period	Float	W	-	R
513	2	Maximum reactive power in the current period	Float	VAR	-	R

Offset	Number of registers	Name	Format	Unit	Value range	Access
515	2	Minimum reactive power in the current period	Float	VAR	-	R
517	2	Length of the current period	Unsigned long	s	-	R
519	2	Time since the start of the instantaneous period	Unsigned long	s	-	R
521	2	Actual Subinterval Time	Unsigned long	s	-	R
523	2	Information on Last Period	Unsigned long	-	Byte 0, Bit 1 Tariff information: 0 = On-peak 1 = Off-peak	R
					Byte 1 1) Quality information:	
					Byte 2 Reserve	
					Byte 3 1) Reactive power information	
525	2	Maximum apparent power in the current period	Float	VA	-	R
527	2	Minimum apparent power in the current period	Float	VA	-	R
529	2	Cumulated active power import in the instantaneous period	Float	W	-	R
531	2	Cumulated reactive power import in the instantaneous period	Float	VAR	-	R
533	2	Cumulated active power export in the instantaneous period	Float	W	-	R
535	2	Cumulated reactive power export in the instantaneous period	Float	VAR	-	R
537	2	Max. Active Power Instantaneous Period	Float	W	-	R
539	2	Min. Active Power Instantaneous Period	Float	W	-	R
541	2	Max. Reactive Power Instantaneous Period	Float	VAR	-	R
543	2	Min. Reactive Power Instantaneous Period	Float	VAR	-	R

Table A- 10 Meaning of the abbreviations in the "Access" column

Abbreviation	Meaning
R	Read access
W	Write access
RW	Read and write access

Table A- 11 1) Structure of the value range for offset 523 "Information on Last Period"

Byte	Bit	Meaning
1	7	Uncertain: This bit is set if the measuring voltage or the measuring current is out of range in the period.
	6	Supply voltage failure in the period
	5	This bit is set owing to a resynchronization or if the time is uncertain. Additional information about the load profile data (Page 30)
	4	This bit is set if individual subperiods are not available for computing the values.
	3 … 1	Reserve
	0	Period length is too short
3	7	Period contains Budeanu's reactive power Qn[1)]
	6	Period contains fundamental connection reactive power VAR1
	5	Period contains total reactive power Qtot
	4	The reactive power type recorded was changed in the period.
	3 … 0	Reserve

[1)] Budeanu = Offset reactive power

A.2.6 Tariff-specific energy values in double format with the function codes 0x03, 0x04, and 0x10

Addressing the tariff-specific energy values

Table A- 12 Available tariff-specific measured variables

Offset	Number of registers	Name	Format	Unit	Value range	Access
797	4	Date/time	Time stamp	-	-	RW
801	4	Active Energy Import Tariff 1	Double	Wh	Overflow 1.0e+12	RW
805	4	Active Energy Import Tariff 2	Double	Wh	Overflow 1.0e+12	RW
809	4	Active Energy Export Tariff 1	Double	Wh	Overflow 1.0e+12	RW
813	4	Active Energy Export Tariff 2	Double	Wh	Overflow 1.0e+12	RW
817	4	Reactive Energy Import Tariff 1	Double	VARh	Overflow 1.0e+12	RW
821	4	Reactive Energy Import Tariff 2	Double	VARh	Overflow 1.0e+12	RW
825	4	Reactive Energy Export Tariff 1	Double	VARh	Overflow 1.0e+12	RW
829	4	Reactive Energy Export Tariff 2	Double	VARh	Overflow 1.0e+12	RW
833	4	Apparent Energy Tariff 1	Double	VAh	Overflow 1.0e+12	RW
837	4	Apparent Energy Tariff 2	Double	VAh	Overflow 1.0e+12	RW
841	4	Process active energy	Double	Wh	Overflow 1.0e+12	RW
845	4	Process reactive energy	Double	VARh	Overflow 1.0e+12	RW
849	4	Process apparent energy	Double	VAh	Overflow 1.0e+12	RW
853	4	Process active energy – previous measurement	Double	Wh	-	R
857	4	Process reactive energy – previous measurement	Double	VARh	-	R
861	4	Process apparent energy – previous measurement	Double	VAh	-	R

Table A- 13 Meaning of the abbreviations in the "Access" column

Abbreviation	Meaning
R	Read access
W	Write access
RW	Read and write access

A.2.7 Tariff-specific energy values in float format with the function codes 0x03 and 0x04

Addressing the tariff-specific energy values

Table A- 14 Available tariff-specific measured variables

Offset	Number of registers	Name	Format	Unit	Value range	Access
2799	2	Date/time	Unsigned long	-	-	R
2801	2	Active Energy Import Tariff 1	Float	Wh	Overflow 1.0e+12	R
2803	2	Active Energy Import Tariff 2	Float	Wh	Overflow 1.0e+12	R
2805	2	Active Energy Export Tariff 1	Float	Wh	Overflow 1.0e+12	R
2807	2	Active Energy Export Tariff 2	Float	Wh	Overflow 1.0e+12	R
2809	2	Reactive Energy Import Tariff 1	Float	VARh	Overflow 1.0e+12	R
2811	2	Reactive Energy Import Tariff 2	Float	VARh	Overflow 1.0e+12	R
2813	2	Reactive Energy Export Tariff 1	Float	VARh	Overflow 1.0e+12	R
2815	2	Reactive Energy Export Tariff 2	Float	VARh	Overflow 1.0e+12	R
2817	2	Apparent Energy Tariff 1	Float	VAh	Overflow 1.0e+12	R
2819	2	Apparent Energy Tariff 2	Float	VAh	Overflow 1.0e+12	R
2821	2	Process active energy	Float	Wh	Overflow 1.0e+12	R
2823	2	Process reactive energy	Float	VARh	Overflow 1.0e+12	R
2825	2	Process apparent energy	Float	VAh	Overflow 1.0e+12	R
2827	2	Process active energy – previous measurement	Float	Wh	-	R
2829	2	Process reactive energy – previous measurement	Float	VARh	-	R
2831	2	Process apparent energy – previous measurement	Float	VAh	-	R

Table A- 15 Meaning of the abbreviations in the "Access" column

Abbreviation	Meaning
R	Read access

A.2.8 Maximum values with a time stamp and the function codes 0x03 and 0x04

Addressing the maximum values with a time stamp

SENTRON PAC4200 provides the maximum values listed below with a time stamp.

Table A- 16 Structure of the "time stamp" format

Byte	Format	Description
0 … 3	Unsigned long	Unix time; seconds since 1 January 1970 0:00 h
4 … 7	Unsigned long	Not used, i.e. always "0"

Table A- 17 Available measured variables: Maximum values with time stamp

Offset	Number of registers	Name	Format	Unit	Value range	Access
3001	6	Maximum Voltage L1-N with Time	Float + time stamp	V	-	R
3007	6	Maximum Voltage L2-N with Time	Float + time stamp	V	-	R
3013	6	Maximum Voltage L3-N with Time	Float + time stamp	V	-	R
3019	6	Maximum Voltage L1-L2 with Time	Float + time stamp	V	-	R
3025	6	Maximum Voltage L2-L3 with Time	Float + time stamp	V	-	R
3031	6	Maximum Voltage L3-L1 with Time	Float + time stamp	V	-	R
3037	6	Maximum Current L1 with Time	Float + time stamp	A	-	R
3043	6	Maximum Current L2 with Time	Float + time stamp	A	-	R
3049	6	Maximum Current L3 with Time	Float + time stamp	A	-	R
3055	6	Maximum Apparent Power L1 with Time	Float + time stamp	VA	-	R
3061	6	Maximum Apparent Power L2 with Time	Float + time stamp	VA	-	R
3067	6	Maximum Apparent Power L3 with Time	Float + time stamp	VA	-	R
3073	6	Maximum Active Power L1 with Time	Float + time stamp	W	-	R
3079	6	Maximum Active Power L2 with Time	Float + time stamp	W	-	R
3085	6	Maximum Active Power L3 with Time	Float + time stamp	W	-	R
3091	6	Maximum Reactive Power L1 (Qn) with Time	Float + time stamp	VAR	-	R
3097	6	Maximum Reactive Power L2 (Qn) with Time	Float + time stamp	VAR	-	R
3103	6	Maximum Reactive Power L3 (Qn) with Time	Float + time stamp	VAR	-	R
3109	6	Maximum Total Reactive Power L1 (Qtot) with Time	Float + time stamp	VAR	-	R
3115	6	Maximum Total Reactive Power L2 (Qtot) with Time	Float + time stamp	VAR	-	R
3121	6	Maximum Total Reactive Power L3 (Qtot) with Time	Float + time stamp	VAR	-	R

Offset	Number of registers	Name	Format	Unit	Value range	Access
3127	6	Maximum Reactive Power L1 (Q1) with Time	Float + time stamp	VAR	-	R
3133	6	Maximum Reactive Power L2 (Q1) with Time	Float + time stamp	VAR	-	R
3139	6	Maximum Reactive Power L3 (Q1) with Time	Float + time stamp	VAR	-	R
3145	6	Maximum Power Factor L1 with Time	Float + time stamp	-	0 … 1	R
3151	6	Maximum Power Factor L2 with Time	Float + time stamp	-	0 … 1	R
3157	6	Maximum Power Factor L3 with Time	Float + time stamp	-	0 … 1	R
3163	6	Maximum THD Voltage L1-L2 referred to Fundamental with Time	Float + time stamp	%	0 … 100	R
3169	6	Maximum THD Voltage L2-L3 referred to Fundamental with Time	Float + time stamp	%	0 … 100	R
3175	6	Maximum THD Voltage L3-L1 referred to Fundamental with Time	Float + time stamp	%	0 … 100	R
3199	6	Maximum cos φ L1 with Time	Float + time stamp	$\cos \varphi_{L1}$	-	R
3205	6	Maximum cos φ L2 with Time	Float + time stamp	$\cos \varphi_{L2}$	-	R
3211	6	Maximum cos φ L3 with Time	Float + time stamp	$\cos \varphi_{L3}$	-	R
3217	6	Maximum Displacement Angle L1 with Time	Float + time stamp	°	-	R
3223	6	Maximum Displacement Angle L2 with Time	Float + time stamp	°	-	R
3229	6	Maximum Displacement Angle L3 with Time	Float + time stamp	°	-	R
3235	6	Maximum phase angle L1-L1	Float + time stamp	°	-	R
3241	6	Maximum phase angle L1-L2	Float + time stamp	°	-	R
3247	6	Maximum phase angle L1-L3	Float + time stamp	°	-	R
3253	6	Maximum THD Voltage L1 with Time	Float + time stamp	%	0 … 100	R
3259	6	Maximum THD Voltage L2 with Time	Float + time stamp	%	0 … 100	R
3265	6	Maximum THD Voltage L3 with Time	Float + time stamp	%	0 … 100	R
3271	6	Maximum THD Current L1 with Time	Float + time stamp	%	0 … 100	R
3277	6	Maximum THD Current L2 with Time	Float + time stamp	%	0 … 100	R
3283	6	Maximum THD Current L3 with Time	Float + time stamp	%	0 … 100	R
3289	6	Maximum Distortion L1 with Time	Float + time stamp	A	-	R
3295	6	Maximum Distortion L2 with Time	Float + time stamp	A	-	R
3301	6	Maximum Distortion L3 with Time	Float + time stamp	A	-	R
3307	6	Maximum Line Frequency with Time	Float + time stamp	-	45 … 65	R
3313	6	Maximum 3-Phase Average Voltage L-N with Time	Float + time stamp	V	-	R
3319	6	Maximum 3-Phase Average Voltage L-L with Time	Float + time stamp	V	-	R
3325	6	Maximum 3-Phase Average Current with Time	Float + time stamp	A	-	R

Offset	Number of registers	Name	Format	Unit	Value range	Access
3331	6	Maximum Total Apparent Power with Time	Float + time stamp	VA	-	R
3337	6	Maximum Total Active Power with Time	Float + time stamp	W	-	R
3343	6	Maximum Total Reactive Power (Qn) with Time	Float + time stamp	VAR	-	R
3349	6	Maximum Total Power Factor with Time	Float + time stamp	-	-	R
3355	6	Maximum Neutral Current with Time	Float + time stamp	A	-	R
3361	6	Maximum Total Reactive Power (Qtot) with Time	Float + time stamp	VAR	-	R
3367	6	Maximum Total Reactive Power (Q1) with Time	Float + time stamp	VAR	-	R
3373	6	Max. Sliding Window Demand Voltage L1-N with Time	Float + time stamp	V	-	R
3379	6	Max. Sliding Window Demand Voltage L2-N with Time	Float + time stamp	V	-	R
3385	6	Max. Sliding Window Demand Voltage L3-N with Time	Float + time stamp	V	-	R
3391	6	Max. Sliding Window Demand Voltage L1-L2 with Time	Float + time stamp	V	-	R
3397	6	Max. Sliding Window Demand Voltage L2-L3 with Time	Float + time stamp	V	-	R
3403	6	Max. Sliding Window Demand Voltage L3-L1 with Time	Float + time stamp	V	-	R
3409	6	Max. Sliding Window Demand Current L1 with Time	Float + time stamp	A	-	R
3415	6	Max. Sliding Window Demand Current L2 with Time	Float + time stamp	A	-	R
3421	6	Max. Sliding Window Demand Current L3 with Time	Float + time stamp	A	-	R
3427	6	Max. Sliding Window Demand Apparent Power L1 with Time	Float + time stamp	VA	-	R
3433	6	Max. Sliding Window Demand Apparent Power L2 with Time	Float + time stamp	VA	-	R
3439	6	Max. Sliding Window Demand Apparent Power L3 with Time	Float + time stamp	VA	-	R
3445	6	Max. Sliding Window Demand Active Power L1 with Time	Float + time stamp	W	-	R
3451	6	Max. Sliding Window Demand Active Power L2 with Time	Float + time stamp	W	-	R
3457	6	Max. Sliding Window Demand Active Power L3 with Time	Float + time stamp	W	-	R
3463	6	Max. Sliding Window Demand Reactive Power L1 (Qn) with Time	Float + time stamp	VAR	-	R
3469	6	Max. Sliding Window Demand Reactive Power L2 (Qn) with Time	Float + time stamp	VAR	-	R

Offset	Number of registers	Name	Format	Unit	Value range	Access
3475	6	Max. Sliding Window Demand Reactive Power L3 (Qn) with Time	Float + time stamp	VAR	-	R
3481	6	Max. Sliding Window Demand Total Reactive Power L1 (Qtot) with Time	Float + time stamp	VAR	-	R
3487	6	Max. Sliding Window Demand Total Reactive Power L2 (Qtot) with Time	Float + time stamp	VAR	-	R
3493	6	Max. Sliding Window Demand Total Reactive Power L3 (Qtot) with Time	Float + time stamp	VAR	-	R
3499	6	Max. Sliding Window Demand Reactive Power L1 (Q1) with Time	Float + time stamp	VAR	-	R
3505	6	Max. Sliding Window Demand Reactive Power L2 (Q1) with Time	Float + time stamp	VAR	-	R
3511	6	Max. Sliding Window Demand Reactive Power L3 (Q1) with Time	Float + time stamp	VAR	-	R
3517	6	Max. Sliding Window Demand Power Factor L1 with Time	Float + time stamp	-	0 … 1	R
3523	6	Max. Sliding Window Demand Power Factor L2 with Time	Float + time stamp	-	0 … 1	R
3529	6	Max. Sliding Window Demand Power Factor L3 with Time	Float + time stamp	-	0 … 1	R
3535	6	Max. Sliding Window Demand Total Apparent Power with Time	Float + time stamp	VA	-	R
3541	6	Max. Sliding Window Demand Total Active Power with Time	Float + time stamp	W	-	R
3547	6	Max. Sliding Window Demand Total Reactive Power (Qn) with Time	Float + time stamp	VAR	-	R
3553	6	Max. Sliding Window Demand Total Reactive Power (Qtot) with Time	Float + time stamp	VAR	-	R
3559	6	Max. Sliding Window Demand Total Reactive Power (Q1) with Time	Float + time stamp	VAR	-	R
3565	6	Max. Sliding Window Demand Total Power Factor with Time	Float + time stamp	-	-	R
3571	6	Max. Sliding Window Demand Neutral Current with Time	Float + time stamp	A	-	R

A.2.9 Minimum values with a time stamp and the function codes 0x03 and 0x04

Addressing the minimum values with a time stamp

Table A- 18 Available measured variables: Minimum values with time stamp

Offset	Number of registers	Name	Format	Unit	Value range	Access
6001	6	Minimum Voltage L1-N with Time	Float + time stamp	V	-	R
6007	6	Minimum Voltage L2-N with Time	Float + time stamp	V	-	R
6013	6	Minimum Voltage L3-N with Time	Float + time stamp	V	-	R
6019	6	Minimum Voltage L1-L2 with Time	Float + time stamp	V	-	R
6025	6	Minimum Voltage L2-L3 with Time	Float + time stamp	V	-	R
6031	6	Minimum Voltage L3-L1 with Time	Float + time stamp	V	-	R
6037	6	Minimum Current L1 with Time	Float + time stamp	A	-	R
6043	6	Minimum Current L2 with Time	Float + time stamp	A	-	R
6049	6	Minimum Current L3 with Time	Float + time stamp	A	-	R
6055	6	Minimum Apparent Power L1 with Time	Float + time stamp	VA	-	R
6061	6	Minimum Apparent Power L2 with Time	Float + time stamp	VA	-	R
6067	6	Minimum Apparent Power L3 with Time	Float + time stamp	VA	-	R
6073	6	Minimum Active Power L1 with Time	Float + time stamp	W	-	R
6079	6	Minimum Active Power L2 with Time	Float + time stamp	W	-	R
6085	6	Minimum Active Power L3 with Time	Float + time stamp	W	-	R
6091	6	Minimum Reactive Power L1 (Qn) with Time	Float + time stamp	VAR	-	R
6097	6	Minimum Reactive Power L2 (Qn) with Time	Float + time stamp	VAR	-	R
6103	6	Minimum Reactive Power L3 (Qn) with Time	Float + time stamp	VAR	-	R
6109	6	Minimum Total Reactive Power L1 (Qtot) with Time	Float + time stamp	VAR	-	R
6115	6	Minimum Total Reactive Power L2 (Qtot) with Time	Float + time stamp	VAR	-	R
6121	6	Minimum Total Reactive Power L3 (Qtot) with Time	Float + time stamp	VAR	-	R
6127	6	Minimum Reactive Power L1 (Q1) with Time	Float + time stamp	VAR	-	R
6133	6	Minimum Reactive Power L2 (Q1) with Time	Float + time stamp	VAR	-	R
6139	6	Minimum Reactive Power L3 (Q1) with Time	Float + time stamp	VAR	-	R
6145	6	Minimum Power Factor L1 with Time	Float + time stamp	-	0 … 1	R
6151	6	Minimum Power Factor L2 with Time	Float + time stamp	-	0 … 1	R
6157	6	Minimum Power Factor L3 with Time	Float + time stamp	-	0 … 1	R
6163	6	Minimum cos φ L1 with Time	Float + time stamp	$\cos \varphi_{L1}$	-	R
6169	6	Minimum cos φ L2 with Time	Float + time stamp	$\cos \varphi_{L2}$	-	R
6175	6	Minimum cos φ L3 with Time	Float + time stamp	$\cos \varphi_{L3}$	-	R
6181	6	Minimum Displacement Angle L1 with Time	Float + time stamp	°	-	R
6187	6	Minimum Displacement Angle L2 with Time	Float + time stamp	°	-	R
6193	6	Minimum Displacement Angle L3 with Time	Float + time stamp	°	-	R

Offset	Number of registers	Name	Format	Unit	Value range	Access
6199	6	Minimum phase angle L1-L1	Float + time stamp	°	-	R
6205	6	Minimum phase angle L1-L2	Float + time stamp	°	-	R
6211	6	Minimum phase angle L1-L3	Float + time stamp	°	-	R
6217	6	Minimum Line Frequency with Time	Float + time stamp	-	45 … 65	R
6223	6	Minimum 3-Phase Average Voltage L-N with Time	Float + time stamp	V	-	R
6229	6	Minimum 3-Phase Average Voltage L-L with Time	Float + time stamp	V	-	R
6235	6	Minimum 3-Phase Average Current L-L with Time	Float + time stamp	A	-	R
6241	6	Minimum Total Apparent Power with Time	Float + time stamp	VA	-	R
6247	6	Minimum Total Active Power with Time	Float + time stamp	W	-	R
6253	6	Minimum Total Reactive Power (Qn) with Time	Float + time stamp	VAR	-	R
6259	6	Minimum Total Power Factor (Qn) with Time	Float + time stamp	-	-	R
6265	6	Minimum Neutral Current with Time	Float + time stamp	A	-	R
6271	6	Minimum Total Reactive Power (Qtot) with Time	Float + time stamp	VAR	-	R
6277	6	Minimum Total Reactive Power (Q1) with Time	Float + time stamp	VAR	-	R
6283	6	Min. Sliding Window Demand Voltage L1-N with Time	Float + time stamp	V	-	R
6289	6	Min. Sliding Window Demand Voltage L2-N with Time	Float + time stamp	V	-	R
6295	6	Min. Sliding Window Demand Voltage L3-N with Time	Float + time stamp	V	-	R
6301	6	Min. Sliding Window Demand Voltage L1-L2 with Time	Float + time stamp	V	-	R
6307	6	Min. Sliding Window Demand Voltage L2-L3 with Time	Float + time stamp	V	-	R
6313	6	Min. Sliding Window Demand Voltage L3-L1 with Time	Float + time stamp	V	-	R
6319	6	Min. Sliding Window Demand Current L1 with Time	Float + time stamp	A	-	R
6325	6	Min. Sliding Window Demand Current L2 with Time	Float + time stamp	A	-	R
6331	6	Min. Sliding Window Demand Current L3 with Time	Float + time stamp	A	-	R
6337	6	Min. Sliding Window Demand Apparent Power L1 with Time	Float + time stamp	VA	-	R
6343	6	Min. Sliding Window Demand Apparent Power L2 with Time	Float + time stamp	VA	-	R
6349	6	Min. Sliding Window Demand Apparent Power L3 with Time	Float + time stamp	VA	-	R
6355	6	Min. Sliding Window Demand Active Power L1 with Time	Float + time stamp	W	-	R

Offset	Number of registers	Name	Format	Unit	Value range	Access
6361	6	Min. Sliding Window Demand Active Power L2 with Time	Float + time stamp	W	-	R
6367	6	Min. Sliding Window Demand Active Power L3 with Time	Float + time stamp	W	-	R
6373	6	Min. Sliding Window Demand Reactive Power L1 (Qn) with Time	Float + time stamp	VAR	-	R
6379	6	Min. Sliding Window Demand Reactive Power L2 (Qn) with Time	Float + time stamp	VAR	-	R
6385	6	Min. Sliding Window Demand Reactive Power L3 (Qn) with Time	Float + time stamp	VAR	-	R
6391	6	Min. Sliding Window Demand Total Reactive Power L1 (Qtot) with Time	Float + time stamp	VAR	-	R
6397	6	Min. Sliding Window Demand Total Reactive Power L2 (Qtot) with Time	Float + time stamp	VAR	-	R
6403	6	Min. Sliding Window Demand Total Reactive Power L3 (Qtot) with Time	Float + time stamp	VAR	-	R
6409	6	Min. Sliding Window Demand Reactive Power L1 (Q1) with Time	Float + time stamp	VAR	-	R
6415	6	Min. Sliding Window Demand Reactive Power L2 (Q1) with Time	Float + time stamp	VAR	-	R
6421	6	Min. Sliding Window Demand Reactive Power L3 (Q1) with Time	Float + time stamp	VAR	-	R
6427	6	Min. Sliding Window Demand Power Factor L1 with Time	Float + time stamp	-	0 … 1	R
6433	6	Min. Sliding Window Demand Power Factor L2 with Time	Float + time stamp	-	0 … 1	R
6439	6	Min. Sliding Window Demand Power Factor L3 with Time	Float + time stamp	-	0 … 1	R
6445	6	Min. Sliding Window Demand Total Apparent Power with Time	Float + time stamp	VA	-	R
6451	6	Min. Sliding Window Demand Total Active Power with Time	Float + time stamp	W	-	R
6457	6	Min. Sliding Window Demand Total Reactive Power (Qn) with Time	Float + time stamp	VAR	-	R
6463	6	Min. Sliding Window Demand Total Reactive Power (Qtot) with Time	Float + time stamp	VAR	-	R
6469	6	Min. Sliding Window Demand Total Reactive Power (Q1)	Float + time stamp	VAR	-	R
6475	6	Min. Sliding Window Demand Total Power Factor with Time	Float + time stamp	-	-	R
6481	6	Min. Sliding Window Demand Neutral Current with Time	Float + time stamp	A	-	R

A.2.10 Odd harmonics without a time stamp with the function codes 0x03 and 0x04

For clarity, only the fundamental and the 3rd harmonic are listed in the tables.

Formula

The offsets of the 5th to 31st odd harmonics can be calculated using the formula below:

Offset of nth harmonic = (offset of fundamental) + (length + 1) x (n − 1)

nth - stands for the number of the harmonic

Example 1

Calculation of "5th harmonic voltage L1-N":

- 9001 + (2 + 1) x (5 − 1) = 9013
- Offset of "5th harmonic voltage L1-N" is 9013.

Example 2

Calculation of offset of "31st harmonic voltage L3-N":

- 9005 + (2 +1) x (31 − 1) = 9095
- Offset of "3rd harmonic voltage L3-N" is 9095.

Tables

Offset FC0x03 FC0x04	Length	Name	Format	Unit	Access
9001	2	Fundamental voltage L1-N	FLOAT	V	R
9003	2	Fundamental voltage L2-N	FLOAT	V	R
9005	2	Fundamental voltage L3-N	FLOAT	V	R
9007	2	3rd harmonic voltage L1-N	FLOAT	%	R
9009	2	3rd harmonic voltage L2-N	FLOAT	%	R
9011	2	3rd harmonic voltage L3-N	FLOAT	%	R
See formula	2	nth Harmonic voltage L1-N	FLOAT	%	R
See formula	2	nth Harmonic voltage L2-N	FLOAT	%	R
See formula	2	nth Harmonic voltage L3-N	FLOAT	%	R

Offset FC0x03 FC0x04	Length	Name	Format	Unit	Access
11001	2	Fundamental current L1	FLOAT	A	R
11003	2	Fundamental current L2	FLOAT	A	R
11005	2	Fundamental current L3	FLOAT	A	R
11007	2	3rd harmonic current L1	FLOAT	A	R
11009	2	3rd harmonic current L2	FLOAT	A	R
11011	2	3rd harmonic current L3	FLOAT	A	R
See formula	2	nth Harmonic voltage L1	FLOAT	A	R
See formula	2	nth Harmonic voltage L2	FLOAT	A	R
See formula	2	nth Harmonic voltage L3	FLOAT	A	R

Offset FC0x03 FC0x04	Length	Name	Format	Unit	Access
22001	2	Fundamental voltage L1-L2	FLOAT	V	R
22003	2	Fundamental voltage L2-L3	FLOAT	V	R
22005	2	Fundamental voltage L3-L1	FLOAT	V	R
22007	2	3rd harmonic voltage L1-L2	FLOAT	%	R
22009	2	3rd harmonic voltage L2-L3	FLOAT	%	R
22011	2	3rd harmonic voltage L3-L1	FLOAT	%	R
See formula	2	nth Harmonic voltage L1-L2	FLOAT	%	R
See formula	2	nth Harmonic voltage L2-L3	FLOAT	%	R
See formula	2	nth Harmonic voltage L3-L1	FLOAT	%	R

A.2.11 Odd harmonics with a time stamp with the function codes 0x03 and 0x04

For clarity, only the 3rd harmonics are listed in the table.

Formula

The offsets of the 5th to 31st odd harmonics can be calculated using the formula below:

Offset of nth harmonic = (offset of 3rd harmonic) + (length + 3) x (n − 3)

nth - stands for the number of the harmonic

Example 1

Calculation of offset "Max. 5th harmonic voltage L1-N with time":

- 12999 + (6 + 3) x (5 − 3) = 13017
- Offset of "Max. 5th harmonic voltage L1-N with time" is 13017.

Example 2

Calculation of offset of "Max. 31st harmonic voltage L3-N with time":

- 13011 + (6 + 3) x (31 − 3) = 13263
- Offset of "Max. 31st harmonic voltage L3-N with time" is 13263.

Tables

Offset FC0x03 FC0x04	Length	Name	Format	Unit	Access
12999	6	Max. 3rd harmonic voltage L1-N with time	FLOAT	%	R
13005	6	Max. 3rd harmonic voltage L2-N with time	FLOAT	%	R
13011	6	Max. 3rd harmonic voltage L3-N with time	FLOAT	%	R
See formula	6	Max. nth harmonic voltage L1-N with time	FLOAT	%	R
See formula	6	Max. nth harmonic voltage L2-N with time	FLOAT	%	R
See formula	6	Max. nth harmonic voltage L3-N with time	FLOAT	%	R

Offset FC0x03 FC0x04	Length	Name	Format	Unit	Access
19001	6	Maximum fundamental current L1 with time	FLOAT	A	R
19007	6	Maximum fundamental current L2 with time	FLOAT	A	R
19013	6	Maximum fundamental current L3 with time	FLOAT	A	R
19019	6	Max. 3rd harmonic current L1 with time	FLOAT	A	R
19025	6	Max. 3rd harmonic current L1 with time	FLOAT	A	R
19031	6	Max. 3rd harmonic current L1 with time	FLOAT	A	R
See formula	6	Max. nth harmonic current L1 with time	FLOAT	A	R
See formula	6	Max. nth harmonic current L1 with time	FLOAT	A	R
See formula	6	Max. nth harmonic current L1 with time	FLOAT	A	R

A.2.12 Readout of harmonic components of all harmonics with function codes 0x03, 0x04 and 0x14

For clarity, only the 1st and the 64th harmonics are listed in the table.

Formula

The offsets of the 2nd to 63rd harmonics can be calculated using the formula below:

Offset of nth harmonic = (offset of 1st harmonic) + length x (n − 1)

nth - stands for the number of the harmonic

Example 1

Calculation of offset of "3rd harmonic voltage L1" (FC0x14):

- 5 + 2 x (3 − 1) = 9
- Offset of "3rd harmonic voltage L1" (FC0x14) is 9.

Example 2

Calculation of offset of "3rd harmonic voltage L1" (FC0x3):

- 36005 + 2 x (3 − 1) = 36009
- Offset of "3rd harmonic voltage L1" (FC0x3) is 9.

Example 3

Calculation of offset of "7th max. harmonic voltage L1" (FC0x3):

- 37201 + 4 x (7 − 1) = 37225
- Offset of "7th max. harmonic voltage L1" (FCx03) is 37225.

Table

Note the following:

- The voltage harmonics are expressed in [%] relative to the fundamental.
- The fundamental is expressed absolutely in [V].
- The current harmonics are expressed absolutely in [A].

File FC0x14	Length	Offset FC0x14	Offset FC0x03 FC0x04	Name	Format	Unit	Access
10	2	5	36005	1st harmonic voltage L1	FLOAT	V	R
10	2	See formula	See formula	nth harmonic voltage L1	FLOAT	%	R
10	2	131	36131	64th harmonic voltage L1	FLOAT	%	R
10	2	133	36133	1st harmonic voltage L2	FLOAT	V	R
10	2	See formula	See formula	nth harmonic voltage L2	FLOAT	%	R
10	2	259	36259	64th harmonic voltage L2	FLOAT	%	R
10	2	261	36261	1st harmonic voltage L3	FLOAT	V	R
10	2	See formula	See formula	nth harmonic voltage L3	FLOAT	%	R
10	2	387	36387	64th harmonic voltage L3	FLOAT	%	R
10	2	389	36389	1st harmonic current L1	FLOAT	A	R
10	2	See formula	See formula	nth harmonic current L1	FLOAT	A	R
10	2	515	36515	64th harmonic current L1	FLOAT	A	R
10	2	517	36517	1st harmonic current L2	FLOAT	A	R
10	2	See formula	See formula	nth harmonic current L2	FLOAT	A	R
10	2	643	36643	64th harmonic current L2	FLOAT	A	R
10	2	645	36645	1st harmonic current L3	FLOAT	A	R
10	2	See formula	See formula	nth harmonic current L3	FLOAT	A	R
10	2	771	36771	64th harmonic current L3	FLOAT	A	R
10	2	773	36773	1st harmonic voltage Ph-Ph L12	FLOAT	V	R
10	2	See formula	See formula	nth harmonic voltage Ph-Ph L12	FLOAT	%	R
10	2	899	36899	64th harmonic voltage ph-ph L12	FLOAT	%	R
10	2	901	36901	1st harmonic voltage ph-ph L23	FLOAT	V	R
10	2	See formula	See formula	nth harmonic voltage ph-ph L23	FLOAT	%	R
10	2	1027	37027	64th harmonic voltage ph-ph L23	FLOAT	%	R
10	2	1029	37029	1st harmonic voltage ph-ph L31	FLOAT	V	R
10	2	See formula	See formula	nth harmonic voltage ph-ph L31	FLOAT	%	R

File FC0x14	Length	Offset FC0x14	Offset FC0x03 FC0x04	Name	Format	Unit	Access
10	2	1155	37155	64th harmonic voltage ph-ph L31	FLOAT	%	R
11	4	1	37201	1st max. harmonic voltage L1	FLOAT+TS32	V	R
11	4	See formula	See formula	nth max. harmonic voltage L1	FLOAT	%	R
11	4	53	37453	64th max. harmonic voltage L1	FLOAT+TS32	%	R
11	4	257	37457	1st max. harmonic voltage L2	FLOAT+TS32	V	R
11	4	See formula	See formula	nth max. harmonic voltage L2	FLOAT+TS32	%	R
11	4	509	37709	64th max. harmonic voltage L2	FLOAT+TS32	%	R
11	4	513	37713	1st max. harmonic voltage L3	FLOAT+TS32	V	R
11	4	See formula	See formula	nth max. harmonic voltage L3	FLOAT+TS32	%	R
11	4	765	37965	64th max. harmonic voltage L3	FLOAT+TS32	%	R
11	4	769	37969	1st max. harmonic current L1	FLOAT+TS32	A	R
11	4	See formula	See formula	nth max. harmonic current L1	FLOAT+TS32	A	R
11	4	1021	38221	64th max. harmonic current L1	FLOAT+TS32	A	R
11	4	1025	38225	1st max. harmonic current L2	FLOAT+TS32	A	R
11	4	See formula	See formula	nth max. harmonic current L2	FLOAT+TS32	A	R
11	4	1277	38477	64th max. harmonic current L2	FLOAT+TS32	A	R
11	4	1281	38481	1st max. harmonic current L3	FLOAT+TS32	A	R
11	4	See formula	See formula	nth max. harmonic current L3	FLOAT+TS32	A	R
11	4	1533	38733	64th max. harmonic current L3	FLOAT+TS32	A	R
11	4	1537	38737	1st max. harmonic voltage ph-ph L12	FLOAT+TS32	V	R
11	4	See formula	See formula	nth max. harmonic voltage ph-ph L12	FLOAT+TS32	%	R
11	4	1789	38989	64th max. harmonic voltage ph-ph L12	FLOAT+TS32	%	R
11	4	1793	38993	1sth max. harmonic voltage ph-ph L23	FLOAT+TS32	V	R
11	4	See formula	See formula	nth max. harmonic voltage ph-ph L23	FLOAT+TS32	%	R
11	4	2045	39245	64th max. harmonic voltage ph-ph L23	FLOAT+TS32	%	R
11	4	2049	39249	1st max. harmonic voltage ph-ph L31	FLOAT+TS32	V	R
11	4	See formula	See formula	nth max. harmonic voltage ph-ph L31	FLOAT+TS32	%	R
11	4	2301	39501	64th max. harmonic voltage ph-ph L31	FLOAT+TS32	%	R

A.2.13 Readout of averages (aggregation) with function codes 0x03, 0x04 and 0x14

The values are updated at time-synchronized, parameterizable intervals:

- Measured values for average 1 (file 1)

  Default setting: Period length = 10 s
- Measured values for average 2 (file 2)

  Default setting: Period length = 15 min
- Harmonic average (file 3)

  Default setting: Period length = 15 min

For clarity, only the 1st and the 64th harmonics are listed in the table.

Formula

The offsets of the 2nd to 64th harmonics can be calculated using the formula below:

Offset of nth harmonic = (offset of 1st harmonic) + (length + 4) x (n − 1)

nth - stands for the number of the harmonic

Example 1

Calculation of offset of "3rd harmonic current L1" (FC0x14):

- 5 + (2 + 4) x (3 – 1) = 17
- Offset of "3rd harmonic current L1 " (FC0x14) is 17.

Example 2

Calculation of offset of "3rd harmonic current L3 " (FC0x14):

- 9 + (2 + 4) x (3 – 1) = 21
- Offset of "3rd harmonic current L3 " (FC0x14) is 21.

Example 3

Calculation of offset of "3rd harmonic current L3 " (FC0x3):

- 32009 + (2 + 4) x (3 – 1) = 32021
- Offset of "3rd harmonic current L3 " (FC0x3) is 32021.

Table

File FC0x14	Length	Offset FC0x14	Offset FC0x03 FC0x04	Name	Format	Unit	Access
1	2	1	30001	Time stamp aggregation stage n	UNIX_TS	s	R
1	2	3	30003	Flag aggregation stage n	UINT32	-	R
1	2	5	30005	Voltage PH-N L1	FLOAT	V	R
1	2	7	30007	Voltage PH-N L2	FLOAT	V	R
1	2	9	30009	Voltage PH-N L3	FLOAT	V	R
1	2	11	30011	Voltage PH-PH L1-L2	FLOAT	V	R
1	2	13	30013	Voltage PH-PH L2-L3	FLOAT	V	R
1	2	15	30015	Voltage PH-PH L3-L1	FLOAT	V	R
1	2	17	30017	Current L1	FLOAT	A	R
1	2	19	30019	Current L2	FLOAT	A	R
1	2	21	30021	Current L3	FLOAT	A	R
1	2	23	30023	Apparent power L1	FLOAT	VA	R
1	2	25	30025	Apparent power L2	FLOAT	VA	R
1	2	27	30027	Apparent power L3	FLOAT	VA	R
1	2	29	30029	Active power L1	FLOAT	W	R
1	2	31	30031	Active power L2	FLOAT	W	R
1	2	33	30033	Active power L3	FLOAT	W	R
1	2	35	30035	Reactive power L1 (Q_n)	FLOAT	VAR	R
1	2	37	30037	Reactive power L2 (Q_n)	FLOAT	VAR	R
1	2	39	30039	Reactive power L3 (Q_n)	FLOAT	VAR	R
1	2	41	30041	Power factor L1	FLOAT	-	R
1	2	43	30043	Power factor L2	FLOAT	-	R
1	2	45	30045	Power factor L3	FLOAT	-	R
1	2	47	30047	THD voltage L1	FLOAT	%	R
1	2	49	30049	THD voltage L2	FLOAT	%	R
1	2	51	30051	THD voltage L3	FLOAT	%	R
1	2	53	30053	THD current L1	FLOAT	%	R
1	2	55	30055	THD current L2	FLOAT	%	R
1	2	57	30057	THD current L3	FLOAT	%	R
1	2	59	30059	THD voltage L12	FLOAT	%	R
1	2	61	30061	THD voltage L23	FLOAT	%	R
1	2	63	30063	THD voltage L31	FLOAT	%	R
1	2	65	30065	Reactive power L1 (Q_1)	FLOAT	var	R
1	2	67	30067	Reactive power L2 (Q_1)	FLOAT	var	R
1	2	69	30069	Reactive power L3 (Q_1)	FLOAT	var	R
1	2	71	30071	Reactive power L1 (Q_{tot})	FLOAT	var	R
1	2	73	30073	Reactive power L2 (Q_{tot})	FLOAT	var	R
1	2	75	30075	Reactive power L3 (Q_{tot})	FLOAT	var	R

File FC0x14	Length	Offset FC0x14	Offset FC0x03 FC0x04	Name	Format	Unit	Access
1	2	77	30077	Cos φ_{L1}	FLOAT	-	R
1	2	79	30079	Cos φ_{L2}	FLOAT	-	R
1	2	81	30081	Cos φ_{L3}	FLOAT	-	R
1	2	83	30083	Distortion current L1	FLOAT	A	R
1	2	85	30085	Distortion current L2	FLOAT	A	R
1	2	87	30087	Distortion current L3	FLOAT	A	R
1	2	89	30089	Voltage system angle U_{L1}-U_{L1}	FLOAT	°	R
1	2	91	30091	Voltage system angle U_{L1}-U_{L2}	FLOAT	°	R
1	2	93	30093	Voltage system angle U_{L1}-U_{L3}	FLOAT	°	R
1	2	95	30095	Phase angle φ_{L1}	FLOAT	°	R
1	2	97	30097	Phase angle φ_{L2}	FLOAT	°	R
1	2	99	30099	Phase angle φ_{L3}	FLOAT	°	R
1	2	101	30101	Frequency	FLOAT	Hz	R
1	2	103	30103	Average voltage PH-N	FLOAT	V	R
1	2	105	30105	Average voltage PH-PH	FLOAT	V	R
1	2	107	30107	Average current	FLOAT	A	R
1	2	109	30109	Collective apparent power	FLOAT	VA	R
1	2	111	30111	Collective active power	FLOAT	W	R
1	2	113	30113	Collective reactive power (Q_n)	FLOAT	VAR	R
1	2	115	30115	Collective reactive power (Q_1)	FLOAT	VAR	R
1	2	117	30117	Collective reactive power (Q_{tot})	FLOAT	VAR	R
1	2	119	30119	Collective power factor	FLOAT	-	R
1	2	121	30121	Amplitude voltage unbalance	FLOAT	%	R
1	2	123	30123	Amplitude current unbalance	FLOAT	%	R
1	2	125	30125	Voltage unbalance	FLOAT	%	R
1	2	127	30127	Current unbalance	FLOAT	%	R
1	2	129	30129	Neutral current	FLOAT	A	R

File FC0x14	Length	Offset FC0x14	Offset FC0x03 FC0x04	Name	Format	Unit	Access
1	2	201	30201	Time stamp aggregation stage n	UNIX_TS	s	R
1	2	203	30203	Flag aggregation stage n	UINT32	-	R
1	2	205	30205	Max. voltage PH-N L1	FLOAT	V	R
1	2	207	30207	Max. voltage PH-N L2	FLOAT	V	R
1	2	209	30209	Max. voltage PH-N L3	FLOAT	V	R
1	2	211	30211	Max. voltage PH-PH L1-L2	FLOAT	V	R
1	2	213	30213	Max. voltage PH-PH L2-L3	FLOAT	V	R
1	2	215	30215	Max. voltage PH-PH L3-L1	FLOAT	V	R
1	2	217	30217	Maximum current L1	FLOAT	A	R
1	2	219	30219	Maximum current L2	FLOAT	A	R
1	2	221	30221	Maximum current L3	FLOAT	A	R
1	2	223	30223	Maximum apparent power L1	FLOAT	VA	R
1	2	225	30225	Maximum apparent power L2	FLOAT	VA	R
1	2	227	30227	Maximum apparent power L3	FLOAT	VA	R
1	2	229	30229	Maximum active power L1	FLOAT	W	R
1	2	231	30231	Maximum active power L2	FLOAT	W	R
1	2	233	30233	Maximum active power L3	FLOAT	W	R
1	2	235	30235	Max. reactive power L1 (Q_n)	FLOAT	VAR	R
1	2	237	30237	Max. reactive power L2 (Q_n)	FLOAT	VAR	R
1	2	239	30239	Max. reactive power L3 (Q_n)	FLOAT	VAR	R
1	2	241	30241	Maximum power factor L1	FLOAT	-	R
1	2	243	30243	Maximum power factor L2	FLOAT	-	R
1	2	245	30245	Maximum power factor L3	FLOAT	-	R
1	2	247	30247	Max. THD voltage L1	FLOAT	%	R
1	2	249	30249	Max. THD voltage L2	FLOAT	%	R
1	2	251	30251	Max. THD voltage L3	FLOAT	%	R
1	2	253	30253	Max. THD current L1	FLOAT	%	R
1	2	255	30255	Max. THD current L2	FLOAT	%	R
1	2	257	30257	Max. THD current L3	FLOAT	%	R
1	2	259	30259	Max. THD voltage L12	FLOAT	%	R
1	2	261	30261	Max. THD voltage L23	FLOAT	%	R
1	2	263	30263	Max. THD voltage L31	FLOAT	%	R
1	2	265	30265	Max. reactive power L1 (Q_1)	FLOAT	var	R
1	2	267	30267	Max. reactive power L2 (Q_1)	FLOAT	var	R
1	2	269	30269	Max. reactive power L3 (Q_1)	FLOAT	var	R
1	2	271	30271	Max. reactive power L1 (Q_{tot})	FLOAT	var	R
1	2	273	30273	Max. reactive power L2 (Q_{tot})	FLOAT	var	R
1	2	275	30275	Max. reactive power L3 (Q_{tot})	FLOAT	var	R
1	2	277	30277	Max. cos φ_{L1}	FLOAT	-	R

File FC0x14	Length	Offset FC0x14	Offset FC0x03 FC0x04	Name	Format	Unit	Access
1	2	279	30279	Max. cos φ_{L2}	FLOAT	-	R
1	2	281	30281	Max. cos φ_{L3}	FLOAT	-	R
1	2	283	30283	Max. distortion current L1	FLOAT	A	R
1	2	285	30285	Max. distortion current L2	FLOAT	A	R
1	2	287	30287	Max. distortion current L3	FLOAT	A	R
1	2	289	30289	Max. voltage system angle U_{L1}-U_{L1}	FLOAT	°	R
1	2	291	30291	Max. voltage system angle U_{L1}-U_{L2}	FLOAT	°	R
1	2	293	30293	Max. voltage system angle U_{L1}-U_{L3}	FLOAT	°	R
1	2	295	30295	Max. phase angle φ_{L1}	FLOAT	°	R
1	2	297	30297	Max. phase angle φ_{L2}	FLOAT	°	R
1	2	299	30299	Max. phase angle φ_{L3}	FLOAT	°	R
1	2	301	30301	Max. frequency	FLOAT	Hz	R
1	2	303	30303	Max. average voltage PH-N	FLOAT	V	R
1	2	305	30305	Max. average voltage PH-PH	FLOAT	V	R
1	2	307	30307	Max. average current	FLOAT	A	R
1	2	309	30309	Max. collective apparent power	FLOAT	VA	R
1	2	311	30311	Max. collective active power	FLOAT	W	R
1	2	313	30313	Max. collective reactive power (Q_n)	FLOAT	VAR	R
1	2	315	30315	Max. collective reactive power (Q_1)	FLOAT	VAR	R
1	2	317	30317	Max. collective reactive power (Q_{tot})	FLOAT	VAR	R
1	2	319	30319	Max. collective power factor	FLOAT	-	R
1	2	321	30321	Max. amplitude voltage unbalance	FLOAT	%	R
1	2	323	30323	Max. amplitude current unbalance	FLOAT	%	R
1	2	325	30325	Max. voltage unbalance	FLOAT	%	R
1	2	327	30327	Max. current unbalance	FLOAT	%	R
1	2	329	30329	Max. neutral current	FLOAT	A	R

File FC0x14	Length	Offset FC0x14	Offset FC0x03 FC0x04	Name	Format	Unit	Access
1	2	401	30401	Time stamp aggregation stage n	UNIX_TS	s	R
1	2	403	30403	Flag aggregation stage n	UINT32	-	R
1	2	405	30405	Min. voltage PH-N L1	FLOAT	V	R
1	2	407	30407	Min. voltage PH-N L2	FLOAT	V	R
1	2	409	30409	Min. voltage PH-N L3	FLOAT	V	R
1	2	411	30411	Min. voltage PH-PH L1-L2	FLOAT	V	R
1	2	413	30413	Min. voltage PH-PH L2-L3	FLOAT	V	R
1	2	415	30415	Min. voltage PH-PH L3-L1	FLOAT	V	R
1	2	417	30417	Min. current L1	FLOAT	A	R
1	2	419	30419	Min. current L2	FLOAT	A	R
1	2	421	30421	Min. current L3	FLOAT	A	R
1	2	423	30423	Min. apparent power L1	FLOAT	VA	R
1	2	425	30425	Min. apparent power L2	FLOAT	VA	R
1	2	427	30427	Min. apparent power L3	FLOAT	VA	R
1	2	429	30429	Min. active power L1	FLOAT	W	R
1	2	431	30431	Min. active power L2	FLOAT	W	R
1	2	433	30433	Min. active power L3	FLOAT	W	R
1	2	435	30435	Min. reactive power L1 (Q_n)	FLOAT	VAR	R
1	2	437	30437	Min. reactive power L2 (Q_n)	FLOAT	VAR	R
1	2	439	30439	Min. reactive power L3 (Q_n)	FLOAT	VAR	R
1	2	441	30441	Min. power factor L1	FLOAT	-	R
1	2	443	30443	Min. power factor L2	FLOAT	-	R
1	2	445	30445	Min. power factor L3	FLOAT	-	R
1	2	447	30447	Min. THD voltage L1	FLOAT	%	R
1	2	449	30449	Min. THD voltage L2	FLOAT	%	R
1	2	451	30451	Min. THD voltage L3	FLOAT	%	R
1	2	453	30453	Min. THD current L1	FLOAT	%	R
1	2	455	30455	Min. THD current L2	FLOAT	%	R
1	2	457	30457	Min. THD current L3	FLOAT	%	R
1	2	459	30459	Min. THD voltage L12	FLOAT	%	R
1	2	461	30461	Min. THD voltage L23	FLOAT	%	R
1	2	463	30463	Min. THD voltage L31	FLOAT	%	R
1	2	465	30465	Min. reactive power L1 (Q_1)	FLOAT	var	R
1	2	467	30467	Min. reactive power L2 (Q_1)	FLOAT	var	R
1	2	469	30469	Min. reactive power L3 (Q_1)	FLOAT	var	R
1	2	471	30471	Min. reactive power L1 (Q_{tot})	FLOAT	var	R
1	2	473	30473	Min. reactive power L2 (Q_{tot})	FLOAT	var	R
1	2	475	30475	Min. reactive power L3 (Q_{tot})	FLOAT	var	R
1	2	477	30477	Min. cos φ_{L1}	FLOAT	-	R

File FC0x14	Length	Offset FC0x14	Offset FC0x03 FC0x04	Name	Format	Unit	Access
1	2	479	30479	Min. cos φ_{L2}	FLOAT	-	R
1	2	481	30481	Min. cos φ_{L3}	FLOAT	-	R
1	2	483	30483	Min. distortion current L1	FLOAT	A	R
1	2	485	30485	Min. distortion current L2	FLOAT	A	R
1	2	487	30487	Min. distortion current L3	FLOAT	A	R
1	2	489	30489	Min. voltage system angle U_{L1}-U_{L1}	FLOAT	°	R
1	2	491	30491	Min. voltage system angle U_{L1}-U_{L2}	FLOAT	°	R
1	2	493	30493	Min. voltage system angle U_{L1}-U_{L3}	FLOAT	°	R
1	2	495	30495	Max. phase angle φ_{L1}	FLOAT	°	R
1	2	497	30497	Min. phase angle φ_{L2}	FLOAT	°	R
1	2	499	30499	Min. phase angle φ_{L3}	FLOAT	°	R
1	2	501	30501	Min. frequency	FLOAT	Hz	R
1	2	503	30503	Min. average voltage PH-N	FLOAT	V	R
1	2	505	30505	Min. average voltage PH-PH	FLOAT	V	R
1	2	507	30507	Min. average current	FLOAT	A	R
1	2	509	30509	Min. collective apparent power	FLOAT	VA	R
1	2	511	30511	Min. collective active power	FLOAT	W	R
1	2	513	30513	Min. collective reactive power (Q_n)	FLOAT	VAR	R
1	2	515	30515	Min. collective reactive power (Q_1)	FLOAT	VAR	R
1	2	517	30517	Min. collective reactive power (Q_{tot})	FLOAT	VAR	R
1	2	519	30519	Min. collective power factor	FLOAT	-	R
1	2	521	30521	Min. amplitude voltage unbalance	FLOAT	%	R
1	2	523	30523	Min. amplitude current unbalance	FLOAT	%	R
1	2	525	30525	Min. voltage unbalance	FLOAT	%	R
1	2	527	30527	Min. current unbalance	FLOAT	%	R
1	2	529	30529	Min. neutral current	FLOAT	A	R

File FC0x14	Length	Offset FC0x14	Offset FC0x03 FC0x04	Name	Format	Unit	Access
2	2	1	31001	Time stamp aggregation stage n	UNIX_TS	s	R
2	2	3	31003	Flag aggregation stage n	UINT32	-	R
2	2	5	31005	Voltage PH-N L1	FLOAT	V	R
2	2	7	31007	Voltage PH-N L2	FLOAT	V	R
2	2	9	31009	Voltage PH-N L3	FLOAT	V	R
2	2	11	31011	Voltage PH-PH L1-L2	FLOAT	V	R
2	2	13	31013	Voltage PH-PH L2-L3	FLOAT	V	R
2	2	15	31015	Voltage PH-PH L3-L1	FLOAT	V	R
2	2	17	31017	Current L1	FLOAT	A	R
2	2	19	31019	Current L2	FLOAT	A	R
2	2	21	31021	Current L3	FLOAT	A	R
2	2	23	31023	Apparent power L1	FLOAT	VA	R
2	2	25	31025	Apparent power L2	FLOAT	VA	R
2	2	27	31027	Apparent power L3	FLOAT	VA	R
2	2	29	31029	Active power L1	FLOAT	W	R
2	2	31	31031	Active power L2	FLOAT	W	R
2	2	33	31033	Active power L3	FLOAT	W	R
2	2	35	31035	Reactive power L1 (Q_n)	FLOAT	VAR	R
2	2	37	31037	Reactive power L2 (Q_n)	FLOAT	VAR	R
2	2	39	31039	Reactive power L3 (Q_n)	FLOAT	VAR	R
2	2	41	31041	Power factor L1	FLOAT	-	R
2	2	43	31043	Power factor L2	FLOAT	-	R
2	2	45	31045	Power factor L3	FLOAT	-	R
2	2	47	31047	THD voltage L1	FLOAT	%	R
2	2	49	31049	THD voltage L2	FLOAT	%	R
2	2	51	31051	THD voltage L3	FLOAT	%	R
2	2	53	31053	THD current L1	FLOAT	%	R
2	2	55	31055	THD current L2	FLOAT	%	R
2	2	57	31057	THD current L3	FLOAT	%	R
2	2	59	31059	THD voltage L12	FLOAT	%	R
2	2	61	31061	THD voltage L23	FLOAT	%	R
2	2	63	31063	THD voltage L31	FLOAT	%	R
2	2	65	31065	Reactive power L1 (Q_1)	FLOAT	var	R
2	2	67	31067	Reactive power L2 (Q_1)	FLOAT	var	R
2	2	69	31069	Reactive power L3 (Q_1)	FLOAT	var	R
2	2	71	31071	Reactive power L1 (Q_{tot})	FLOAT	var	R
2	2	73	31073	Reactive power L2 (Q_{tot})	FLOAT	var	R
2	2	75	31075	Reactive power L3 (Q_{tot})	FLOAT	var	R
2	2	77	31077	Cos φ_{L1}	FLOAT	-	R

File FC0x14	Length	Offset FC0x14	Offset FC0x03 FC0x04	Name	Format	Unit	Access
2	2	79	31079	Cos φ_{L2}	FLOAT	-	R
2	2	81	31081	Cos φ_{L3}	FLOAT	-	R
2	2	83	31083	Distortion current L1	FLOAT	A	R
2	2	85	31085	Distortion current L2	FLOAT	A	R
2	2	87	31087	Distortion current L3	FLOAT	A	R
2	2	89	31089	Voltage system angle U_{L1}-U_{L1}	FLOAT	°	R
2	2	91	31091	Voltage system angle U_{L1}-U_{L2}	FLOAT	°	R
2	2	93	31093	Voltage system angle U_{L1}-U_{L3}	FLOAT	°	R
2	2	95	31095	Phase angle φ_{L1}	FLOAT	°	R
2	2	97	31097	Phase angle φ_{L2}	FLOAT	°	R
2	2	99	31099	Phase angle φ_{L3}	FLOAT	°	R
2	2	101	31101	Frequency	FLOAT	Hz	R
2	2	103	31103	Average voltage PH-N	FLOAT	V	R
2	2	105	31105	Average voltage PH-PH	FLOAT	V	R
2	2	107	31107	Average current	FLOAT	A	R
2	2	109	31109	Collective apparent power	FLOAT	VA	R
2	2	111	31111	Collective active power	FLOAT	W	R
2	2	113	31113	Collective reactive power (Q_n)	FLOAT	VAR	R
2	2	115	31115	Collective reactive power (Q_1)	FLOAT	VAR	R
2	2	117	31117	Collective reactive power (Q_{tot})	FLOAT	VAR	R
2	2	119	31119	Collective power factor	FLOAT	–	R
2	2	121	31121	Amplitude voltage unbalance	FLOAT	%	R
2	2	123	31123	Amplitude current unbalance	FLOAT	%	R
2	2	125	31125	Voltage unbalance	FLOAT	%	R
2	2	127	31127	Current unbalance	FLOAT	%	R
2	72	129	31129	Neutral current	FLOAT	A	R

File FC0x14	Length	Offset FC0x14	Offset FC0x03 FC0x04	Name	Format	Unit	Access
2	2	201	31201	Time stamp aggregation stage n	UNIX_TS	s	R
2	2	203	31203	Flag aggregation stage n	UINT32	-	R
2	2	205	31205	Max. voltage PH-N L1	FLOAT	V	R
2	2	207	31207	Max. voltage PH-N L2	FLOAT	V	R
2	2	209	31209	Max. voltage PH-N L3	FLOAT	V	R
2	2	211	31211	Max. voltage PH-PH L1-L2	FLOAT	V	R
2	2	213	31213	Max. voltage PH-PH L2-L3	FLOAT	V	R
2	2	215	31215	Max. voltage PH-PH L3-L1	FLOAT	V	R
2	2	217	31217	Maximum current L1	FLOAT	A	R
2	2	219	31219	Maximum current L2	FLOAT	A	R
2	2	221	31221	Maximum current L3	FLOAT	A	R
2	2	223	31223	Maximum apparent power L1	FLOAT	VA	R
2	2	225	31225	Maximum apparent power L2	FLOAT	VA	R
2	2	227	31227	Maximum apparent power L3	FLOAT	VA	R
2	2	229	31229	Maximum active power L1	FLOAT	W	R
2	2	231	31231	Maximum active power L2	FLOAT	W	R
2	2	233	31233	Maximum active power L3	FLOAT	W	R
2	2	235	31235	Max. reactive power L1 (Q_n)	FLOAT	VAR	R
2	2	237	31237	Max. reactive power L2 (Q_n)	FLOAT	VAR	R
2	2	239	31239	Max. reactive power L3 (Q_n)	FLOAT	VAR	R
2	2	241	31241	Maximum power factor L1	FLOAT	-	R
2	2	243	31243	Maximum power factor L2	FLOAT	-	R
2	2	245	31245	Maximum power factor L3	FLOAT	-	R
2	2	247	31247	Max. THD voltage L1	FLOAT	%	R
2	2	249	31249	Max. THD voltage L2	FLOAT	%	R
2	2	251	31251	Max. THD voltage L3	FLOAT	%	R
2	2	253	31253	Max. THD current L1	FLOAT	%	R
2	2	255	31255	Max. THD current L2	FLOAT	%	R
2	2	257	31257	Max. THD current L3	FLOAT	%	R
2	2	259	31259	Max. THD voltage L12	FLOAT	%	R
2	2	261	31261	Max. THD voltage L23	FLOAT	%	R
2	2	263	31263	Max. THD voltage L31	FLOAT	%	R
2	2	265	31265	Max. reactive power L1 (Q_1)	FLOAT	var	R
2	2	267	31267	Max. reactive power L2 (Q_1)	FLOAT	var	R
2	2	269	31269	Max. reactive power L3 (Q_1)	FLOAT	var	R
2	2	271	31271	Max. reactive power L1 (Q_{tot})	FLOAT	var	R
2	2	273	31273	Max. reactive power L2 (Q_{tot})	FLOAT	var	R
2	2	275	31275	Max. reactive power L3 (Q_{tot})	FLOAT	var	R
2	2	277	31277	Max. cos φ_{L1}	FLOAT	-	R

File FC0x14	Length	Offset FC0x14	Offset FC0x03 FC0x04	Name	Format	Unit	Access
2	2	279	31279	Max. cos φ_{L2}	FLOAT	-	R
2	2	281	31281	Max. cos φ_{L3}	FLOAT	-	R
2	2	283	31283	Max. distortion current L1	FLOAT	A	R
2	2	285	31285	Max. distortion current L2	FLOAT	A	R
2	2	287	31287	Max. distortion current L3	FLOAT	A	R
2	2	289	31289	Max. voltage system angle U_{L1}-U_{L1}	FLOAT	°	R
2	2	291	31291	Max. voltage system angle U_{L1}-U_{L2}	FLOAT	°	R
2	2	293	31293	Max. voltage system angle U_{L1}-U_{L3}	FLOAT	°	R
2	2	295	31295	Max. phase angle φ_{L1}	FLOAT	°	R
2	2	297	31297	Max. phase angle φ_{L2}	FLOAT	°	R
2	2	299	31299	Max. phase angle φ_{L3}	FLOAT	°	R
2	2	301	31301	Max. frequency	FLOAT	Hz	R
2	2	303	31303	Max. average voltage PH-N	FLOAT	V	R
2	2	305	31305	Max. average voltage PH-PH	FLOAT	V	R
2	2	307	31307	Max. average current	FLOAT	A	R
2	2	309	31309	Max. collective apparent power	FLOAT	VA	R
2	2	311	31311	Max. collective active power	FLOAT	W	R
2	2	313	31313	Max. collective reactive power (Q_n)	FLOAT	VAR	R
2	2	315	31315	Max. collective reactive power (Q_1)	FLOAT	VAR	R
2	2	317	31317	Max. collective reactive power (Q_{tot})	FLOAT	VAR	R
2	2	319	31319	Max. collective power factor	FLOAT	-	R
2	2	321	31321	Max. amplitude voltage unbalance	FLOAT	%	R
2	2	323	31323	Max. amplitude current unbalance	FLOAT	%	R
2	2	325	31325	Max. voltage unbalance	FLOAT	%	R
2	2	327	31327	Max. current unbalance	FLOAT	%	R
2	2	329	31329	Max. neutral current	FLOAT	A	

File FC0x14	Length	Offset FC0x14	Offset FC0x03 FC0x04	Name	Format	Unit	Access
2	2	401	31401	Time stamp aggregation stage n	UNIX_TS	s	R
2	2	403	31403	Flag aggregation stage n	UINT32	-	R
2	2	405	31405	Min. voltage PH-N L1	FLOAT	V	R
2	2	407	31407	Min. voltage PH-N L2	FLOAT	V	R
2	2	409	31409	Min. voltage PH-N L3	FLOAT	V	R
2	2	411	31411	Min. voltage PH-PH L1-L2	FLOAT	V	R
2	2	413	31413	Min. voltage PH-PH L2-L3	FLOAT	V	R
2	2	415	31415	Min. voltage PH-PH L3-L1	FLOAT	V	R
2	2	417	31417	Min. current L1	FLOAT	A	R
2	2	419	31419	Min. current L2	FLOAT	A	R
2	2	421	31421	Min. current L3	FLOAT	A	R
2	2	423	31423	Min. apparent power L1	FLOAT	VA	R
2	2	425	31425	Min. apparent power L2	FLOAT	VA	R
2	2	427	31427	Min. apparent power L3	FLOAT	VA	R
2	2	429	31429	Min. active power L1	FLOAT	W	R
2	2	431	31431	Min. active power L2	FLOAT	W	R
2	2	433	31433	Min. active power L3	FLOAT	W	R
2	2	435	31435	Min. reactive power L1 (Q_n)	FLOAT	VAR	R
2	2	437	31437	Min. reactive power L2 (Q_n)	FLOAT	VAR	R
2	2	439	31439	Min. reactive power L3 (Q_n)	FLOAT	VAR	R
2	2	441	31441	Min. power factor L1	FLOAT	-	R
2	2	443	31443	Min. power factor L2	FLOAT	-	R
2	2	445	31445	Min. power factor L3	FLOAT	-	R
2	2	447	31447	Min. THD voltage L1	FLOAT	%	R
2	2	449	31449	Min. THD voltage L2	FLOAT	%	R
2	2	451	31451	Min. THD voltage L3	FLOAT	%	R
2	2	453	31453	Min. THD current L1	FLOAT	%	R
2	2	455	31455	Min. THD current L2	FLOAT	%	R
2	2	457	31457	Min. THD current L3	FLOAT	%	R
2	2	459	31459	Min. THD voltage L12	FLOAT	%	R
2	2	461	31461	Min. THD voltage L23	FLOAT	%	R
2	2	463	31463	Min. THD voltage L31	FLOAT	%	R
2	2	465	31465	Min. reactive power L1 (Q_1)	FLOAT	var	R
2	2	467	31467	Min. reactive power L2 (Q_1)	FLOAT	var	R
2	2	469	31469	Min. reactive power L3 (Q_1)	FLOAT	var	R
2	2	471	31471	Min. reactive power L1 (Q_{tot})	FLOAT	var	R
2	2	473	31473	Min. reactive power L2 (Q_{tot})	FLOAT	var	R
2	2	475	31475	Min. reactive power L3 (Q_{tot})	FLOAT	var	R
2	2	477	31477	Min. cos φ_{L1}	FLOAT	-	R

File FC0x14	Length	Offset FC0x14	Offset FC0x03 FC0x04	Name	Format	Unit	Access
2	2	479	31479	Min. cos φ_{L2}	FLOAT	-	R
2	2	481	31481	Min. cos φ_{L3}	FLOAT	-	R
2	2	483	31483	Min. distortion current L1	FLOAT	A	R
2	2	485	31485	Min. distortion current L2	FLOAT	A	R
2	2	487	31487	Min. distortion current L3	FLOAT	A	R
2	2	489	31489	Min. voltage system angle U_{L1}-U_{L1}	FLOAT	°	R
2	2	491	31491	Min. voltage system angle U_{L1}-U_{L2}	FLOAT	°	R
2	2	493	31493	Min. voltage system angle U_{L1}-U_{L3}	FLOAT	°	R
2	2	495	31495	Max. phase angle φ_{L1}	FLOAT	°	R
2	2	497	31497	Min. phase angle φ_{L2}	FLOAT	°	R
2	2	499	31499	Min. phase angle φ_{L3}	FLOAT	°	R
2	2	501	31501	Min. frequency	FLOAT	Hz	R
2	2	503	31503	Min. average voltage PH-N	FLOAT	V	R
2	2	505	31505	Min. average voltage PH-PH	FLOAT	V	R
2	2	507	31507	Min. average current	FLOAT	A	R
2	2	509	31509	Min. collective apparent power	FLOAT	VA	R
2	2	511	31511	Min. collective active power	FLOAT	W	R
2	2	513	31513	Min. collective reactive power (Q_n)	FLOAT	VAR	R
2	2	515	31515	Min. collective reactive power (Q_1)	FLOAT	VAR	R
2	2	517	31517	Min. collective reactive power (Q_{tot})	FLOAT	VAR	R
2	2	519	31519	Min. collective power factor	FLOAT	-	R
2	2	521	31521	Min. amplitude voltage unbalance	FLOAT	%	R
2	2	523	31523	Min. amplitude current unbalance	FLOAT	%	R
2	2	525	31525	Min. voltage unbalance	FLOAT	%	R
2	2	527	31527	Min. current unbalance	FLOAT	%	R
2	2	529	31529	Min. neutral current	FLOAT	A	

File FC0x14	Length	Offset FC0x14	Offset FC0x03 FC0x04	Name	Format	Unit	Access
3	2	1	32001	Time stamp aggregation stage n	UNIX_TS	s	R
3	2	3	32003	Flag aggregation stage n	UINT32	-	R
3	2	5	32005	1st harmonic current L1	FLOAT	A	R
3	2	7	32007	1st harmonic current L2	FLOAT	A	R
3	2	9	32009	1st harmonic current L3	FLOAT	A	R
3	2	See formula	See formula	nth harmonic current L1	FLOAT	A	R
3	2	See formula	See formula	nth harmonic current L2	FLOAT	A	R
3	2	See formula	See formula	nth harmonic current L3	FLOAT	A	R
3	2	383	32383	64th harmonic current L1	FLOAT	A	R
3	2	385	32385	64th harmonic current L2	FLOAT	A	R
3	2	387	32387	64th harmonic current L3	FLOAT	A	R
3	2	389	32389	1st harmonic voltage PH-N L1	FLOAT	V	R
3	2	391	32391	1st harmonic voltage PH-N L2	FLOAT	V	R
3	2	393	32393	1st harmonic voltage PH-N L3	FLOAT	V	R
3	2	See formula	See formula	2nd harmonic voltage PH-N L1	FLOAT	%	R
3	2	See formula	See formula	2nd harmonic voltage PH-N L2	FLOAT	%	R
3	2	See formula	See formula	2nd harmonic voltage PH-N L3	FLOAT	%	R
3	2	767	32767	64th harmonic voltage PH-N L1	FLOAT	%	R
3	2	769	32769	64th harmonic voltage PH-N L2	FLOAT	%	R
3	2	771	32771	64th harmonic voltage PH-N L3	FLOAT	%	R
3	2	773	32773	1st harmonic voltage PH-PH L12	FLOAT	V	R
3	2	775	32775	1st harmonic voltage PH-PH L23	FLOAT	V	R
3	2	777	32777	1st harmonic voltage PH-PH L31	FLOAT	V	R
3	2	See formula	See formula	nth harmonic voltage PH-PH L12	FLOAT	%	R
3	2	See formula	See formula	nth harmonic voltage PH-PH L23	FLOAT	%	R
3	2	See formula	See formula	nth harmonic voltage PH-PH L31	FLOAT	%	R
3	2	1151	33151	64th harmonic voltage PH-PH L12	FLOAT	%	R
3	2	1153	33153	64th harmonic voltage PH-PH L23	FLOAT	%	R
3	2	1155	33155	64th harmonic voltage PH-PH L31	FLOAT	%	R

File FC0x14	Length	Offset FC0x14	Offset FC0x03 FC0x04	Name	Format	Unit	Access
3	2	1201	33201	Time stamp aggregation stage n	UNIX_TS	s	R
3	2	1203	33203	Flag aggregation stage n	UINT32	-	R
3	2	1205	33205	1st max. harmonic current L1	FLOAT	A	R
3	2	1207	33207	1st max. harmonic current L2	FLOAT	A	R
3	2	1209	33209	1st max. harmonic current L3	FLOAT	A	R
3	2	See formula	See formula	nth max. harmonic current L1	FLOAT	A	R
3	2	See formula	See formula	nth max. harmonic current L2	FLOAT	A	R
3	2	See formula	See formula	nth max. harmonic current L3	FLOAT	A	R
3	2	1583	33583	64th max. harmonic current L1	FLOAT	A	R
3	2	1585	33585	64th max. harmonic current L2	FLOAT	A	R
3	2	1587	33587	64th max. harmonic current L3	FLOAT	A	R
3	2	1589	33589	1st max. harmonic voltage PH-N L1	FLOAT	V	R
3	2	1591	33591	1st max. harmonic voltage PH-N L2	FLOAT	V	R
3	2	1593	33593	1st max. harmonic voltage PH-N L3	FLOAT	V	R
3	2	See formula	See formula	nth max. harmonic voltage PH-N L1	FLOAT	%	R
3	2	See formula	See formula	nth max. harmonic voltage PH-N L2	FLOAT	%	R
3	2	See formula	See formula	nth max. harmonic voltage PH-N L3	FLOAT	%	R
3	2	1967	33967	64th max. harmonic voltage PH-N L1	FLOAT	%	R
3	2	1969	33969	64th max. harmonic voltage PH-N L2	FLOAT	%	R
3	2	1971	33971	64th max. harmonic voltage PH-N L3	FLOAT	%	R
3	2	1973	33973	1st max. harmonic voltage PH-PH L12	FLOAT	V	R
3	2	1975	33975	1st max. harmonic voltage PH-PH L23	FLOAT	V	R
3	2	1977	33977	1st max. harmonic voltage PH-PH L31	FLOAT	V	R
3	2	See formula	See formula	nth max. harmonic voltage PH-PH L12	FLOAT	%	R
3	2	See formula	See formula	nth max. harmonic voltage PH-PH L23	FLOAT	%	R
3	2	See formula	See formula	nth max. harmonic voltage PH-PH L31	FLOAT	%	R
3	2	2351	34351	64th max. harmonic voltage PH-PH L12	FLOAT	%	R

File FC0x14	Length	Offset FC0x14	Offset FC0x03 FC0x04	Name	Format	Unit	Access
3	2	2353	34353	64th max. harmonic voltage PH-PH L23	FLOAT	%	R
3	2	2355	34355	64th max. harmonic voltage PH-PH L31	FLOAT	%	R

File FC0x14	Length	Offset FC0x14	Offset FC0x03 FC0x04	Name	Format	Unit	Access
3	2	2401	34401	Time stamp aggregation stage n	UNIX_TS	s	R
3	2	2403	34403	Flag aggregation stage n	UINT32	-	R
3	2	2405	34405	1st min. harmonic current L1	FLOAT	A	R
3	2	2407	34407	1st min. harmonic current L2	FLOAT	A	R
3	2	2409	34409	1st min. harmonic current L3	FLOAT	A	R
3	2	See formula	See formula	nth min. harmonic current L1	FLOAT	A	R
3	2	See formula	See formula	nth min. harmonic current L2	FLOAT	A	R
3	2	See formula	See formula	nth min. harmonic current L3	FLOAT	A	R
3	2	2783	34783	64th min. harmonic current L1	FLOAT	A	R
3	2	2785	34785	64th min. harmonic current L2	FLOAT	A	R
3	2	2787	34787	64th min. harmonic current L3	FLOAT	A	R
3	2	2789	34789	1st min. harmonic voltage PH-N L1	FLOAT	V	R
3	2	2791	34791	1st min. harmonic voltage PH-N L2	FLOAT	V	R
3	2	2793	34793	1st min. harmonic voltage PH-N L3	FLOAT	V	R
3	2	See formula	See formula	nth min. harmonic voltage PH-N L1	FLOAT	%	R
3	2	See formula	See formula	nth min. harmonic voltage PH-N L2	FLOAT	%	R
3	2	See formula	See formula	nth min. harmonic voltage PH-N L3	FLOAT	%	R
3	2	3167	35167	64th min. harmonic voltage PH-N L1	FLOAT	%	R
3	2	3169	35169	64th min. harmonic voltage PH-N L2	FLOAT	%	R
3	2	3171	35171	64th min. harmonic voltage PH N L3	FLOAT	%	R
3	2	3173	35173	1st min. harmonic voltage PH-PH L12	FLOAT	V	R
3	2	3175	35175	1st min. harmonic voltage PH-PH L23	FLOAT	V	R
3	2	3177	35177	1st min. harmonic voltage PH-PH L31	FLOAT	V	R
3	2	See formula	See formula	nth min. harmonic voltage PH-PH L12	FLOAT	%	R

File FC0x14	Length	Offset FC0x14	Offset FC0x03 FC0x04	Name	Format	Unit	Access
3	2	See formula	See formula	nth min. harmonic voltage PH-PH L23	FLOAT	%	R
3	2	See formula	See formula	nth min. harmonic voltage PH-PH L31	FLOAT	%	R
3	2	3551	35551	64th min. harmonic voltage PH-PH L12	FLOAT	%	R
3	2	3553	35553	64th min. harmonic voltage PH-PH L23	FLOAT	%	R
3	2	3555	35555	64th min. harmonic voltage PH-PH L31	FLOAT	%	R

A.2.14 Configuration settings with the function codes 0x03, 0x04, and 0x10

Addressing the configuration settings

You can use the MODBUS function codes 0x03 and 0x04 for read accesses and 0x10 for write accesses on all the configuration settings listed below.

Table A- 19 Configuration settings

Offset	Number of registers	Name	Format	Unit	Value range		Access
50001	2	Connection type	Unsigned long	-	0 =	3P4W	RW
					1 =	3P3W	
					2 =	3P4WB	
					3 =	3P3WB	
					4 =	1P2W	
50003	2	Voltage transformer Yes/No	Unsigned long	-	0 =	No	RW
					1 =	Yes	
50005	2	Primary Voltage	Unsigned long	-	1 ... 999999 V		RW
50007	2	Secondary Voltage	Unsigned long	-	1 ... 690 V		RW
50009	2	Voltage transformer Yes/No?	Unsigned long	-	1 =	Yes	RW
50011	2	Primary Current	Unsigned long	-	1 ... 999999 V		RW
50013	2	Secondary Current	Unsigned long	-	1 A, 5 A		RW
50017	2	Line Frequency	Unsigned long	-	-		RW
50019	2	Zero Point Suppression	Float	%	0.0 … 10.0		RW
50021	2	Subperiod Time	Unsigned long	-	HIWORD: Number of subperiods 0 ... 5[1)]		RW
					LOWWORD: Length of subperiod: 1, 2, 3, 4, 5, 6, 10, 20, 30, 60		
50023	2	Sync	Unsigned long	-	0 =	No synchronization	RW
					1 =	Synchronization via bus	
					2 =	Synchronization via DI	
					3 =	Internal clock	

[1)] Subperiods 0 and 1: Fixed block method; subperiods 0 to 5: Rolling block method

Offset	Number of registers	Name	Format	Unit	Value range		Access
50025	2	DI 0.0 Type of Use	Unsigned long	-	0 =	None	RW
					1 =	Pulse input	
					2 =	On/off-peak	
					3 =	Time synchronization	
					4 =	P/QKum synchronization	
					5 =	Status	
					6 =	START/STOP	
					7 =	COPY&RESET	
					8 =	RESET	
50027	2	DI 0.0 Pulse / Edge Evaluation	Unsigned long	-	0 =	Pulse	RW
					1 =	Edge	
50029	2	DI 0.0 Use of Counter Information	Unsigned long	-	0 =	Import kWh	RW
					1 =	Export kWh	
					2 =	Import kVARh	
					3 =	Export kVARh	
					4 =	Description	
50031	2	DI 0.0 Significance of Counter Information	Unsigned long	-	1 … 999		RW
50033	2	DO 0.0 Vector Group Assignment	Unsigned long	-	0 … 99		RW
50035	2	DO 0.0 Type of Use	Unsigned long	-	0 =	OFF	RW
					1 =	Device ON	
					2 =	Remote output	
					3 =	Rotation	
					4 =	Lim. violation	
					5 =	Energy pulse	
					6 =	Sync	
50037	2	DO 0.0 Limit Assignment	Unsigned long	-	0 =	Limit logic	RW
					1 =	Limit 0	
					2 =	Limit 1	
					3 =	Limit 2	
					4 =	Limit 3	
					5 =	Limit 4	
					6 =	Limit 5	
50039	2	DO 0.0 Pulse / Edge Evaluation	Unsigned long	-	0 =	Pulse	RW
					1 =	Edge	
50041	2	DO 0.0 Source Count Signal	Unsigned long	-	0 =	Import kWh	RW
					1 =	Export kWh	
					2 =	Import kVARh	

Offset	Number of registers	Name	Format	Unit	Value range		Access
					3 =	Export kVARh	
50043	2	DO 0.0 Significance of Counter Information	Unsigned long	-	1 … 999		RW
50045	2	DO 0.0 Pulse Length	Unsigned long	-	30 … 500		RW
50047	2	Dialog Language	Unsigned long	-	0 =	German	RW
					1 =	English	
					2 =	Portuguese	
					3 =	Turkish	
					4 =	Spanish	
					5 =	Italian	
					6 =	Russian	
					7 =	French	
					8 =	Chinese	
50049	2	Phase identifier IEC/UL	Unsigned long	-	0 =	IEC	RW
					1 =	US	
50051	2	Universal Counter 1 Source	Unsigned long		0 =	DI	RW
					1 =	DO	
					2 =	Limit logic	
					3 =	Limit 0	
					4 =	Limit 1	
					5 =	Limit 2	
					6 =	Limit 3	
					7 =	Limit 4	
					8 =	Limit 5	
					9 =	Limit 6	
					10 =	Limit 7	
					11 =	Limit 8	
					12 =	Limit 9	
					13 =	Limit 10	
					14 =	Limit 11	
50053	2	Display Refresh Cycle	Unsigned long	ms	330 … 3000		RW
50055	2	Display Contrast	Unsigned long	-	0 … 10		RW
50057	2	Display Backlight Level	Unsigned long	%	0 … 3		RW
50059	2	Display Backlight Dimmed	Unsigned long	%	0 … 3		RW
50061	2	Display Time Until Dimmed	Unsigned long	min	0 … 99		RW

Offset	Number of registers	Name	Format	Unit	Value range		Access
50063	2	Limit 0 ON / OFF	Unsigned long	-	0 =	OFF	RW
					1 =	ON	
50065	2	Limit 0 Hysteresis	Float	&	0.0 … 20.0		RW
50067	2	Limit 0 Pickup Delay	Unsigned long	s	0 … 10		RW
50071	2	Limit 0 Source	Unsigned long	-	0 … 241[2)]		RW
50073	2	Limit 0 Value	Float	-	-		RW
50075	2	Limit 0 Mode ≥/<	Unsigned long	-	0 =	Greater than	RW
					1 =	Lower than	
50077	2	Limit 1 ON / OFF	Unsigned long	-	0 =	OFF	RW
					1 =	ON	
50079	2	Limit 1 Hysteresis	Float	%	0.0 … 20.0		RW
50081	2	Limit 1 Pickup Delay	Unsigned long	s	0 … 10		RW
50085	2	Limit 1 Source	Unsigned long	-	0 … 241[2)]		RW
50087	2	Limit 1 Value	Float	-	-		RW
50089	2	Limit 1 Mode ≥/<	Unsigned long	-	0 =	Greater than	RW
					1 =	Lower than	
50091	2	Limit 2 ON / OFF	Unsigned long	-	0 =	OFF	RW
					1 =	ON	
50093	2	Limit 2 Hysteresis	Float	%	0.0 … 20.0		RW
50095	2	Limit 2 Pickup Delay	Unsigned long	s	0 … 10		RW
50099	2	Limit 2 Source	Unsigned long	-	0 … 241[2)]		RW
50101	2	Limit 2 Value	Float	-	-		RW
50103	2	Limit 2 Mode ≥/<	Unsigned long	-	0 =	Greater than	RW
					1 =	Lower than	
50105	2	Limit 3 ON / OFF	Unsigned long	-	0 =	OFF	RW
					1 =	ON	
50107	2	Limit 3 Hysteresis	Float	%	0.0 … 20.0		RW
50109	2	Limit 3 Pickup Delay	Unsigned long	s	0 … 10		RW
50113	2	Limit 3 Source	Unsigned long	-	0 … 241[2)]		RW
50115	2	Limit 3 Value	Float	-	-		RW
50117	2	Limit 3 Mode ≥/<	Unsigned long	-	0 =	Greater than	RW
					1 =	Lower than	
50119	2	Limit 4 ON / OFF	Unsigned long	-	0 =	OFF	RW
					1 =	ON	
50121	2	Limit 4 Hysteresis	Float	%	0.0 … 20.0		RW
50123	2	Limit 4 Pickup Delay	Unsigned long	s	0 … 10		RW
50127	2	Limit 4 Source	Unsigned long	-	0 … 241[2)]		RW
50129	2	Limit 4 Value	Float	-	-		RW
50131	2	Limit 4 Mode ≥/<	Unsigned long	-	0 =	Greater than	RW
					1 =	Lower than	

Offset	Number of registers	Name	Format	Unit	Value range		Access
50133	2	Limit 5 ON / OFF	Unsigned long	-	0 =	OFF	RW
					1 =	ON	
50135	2	Limit 5 Hysteresis	Float	%	0.0 … 20.0		RW
50137	2	Limit 5 Pickup Delay	Unsigned long	s	0 … 10		RW
50141	2	Limit 5 Source	Unsigned long	-	0 … 241[2)]		RW
50143	2	Limit 5 Value	Float	-	-		RW
50145	2	Limit 5 Mode ≥/<	Unsigned long	-	0 =	Greater than	RW
					1 =	Lower than	
50147	2	Limit 6 ON / OFF	Unsigned long	-	0 =	OFF	RW
					1 =	ON	
50149	2	Limit 6 Hysteresis	Float	%	0.0 … 20.0		RW
50151	2	Limit 6 Pickup Delay	Unsigned long	s	0 … 10		RW
50155	2	Limit 6 Source	Unsigned long	-	0 … 241[2)]		RW
50157	2	Limit 6 Value	Float	-	-		RW
50159	2	Limit 6 Mode ≥/<	Unsigned long	-	0 =	Greater than	RW
					1 =	Lower than	
50161	2	Limit 7 ON / OFF	Unsigned long	-	0 =	OFF	RW
					1 =	ON	
50163	2	Limit 7 Hysteresis	Float	%	0.0 … 20.0		RW
50165	2	Limit 7 Pickup Delay	Unsigned long	s	0 … 10		RW
50169	2	Limit 7 Source	Unsigned long	-	0 … 241[2)]		RW
50171	2	Limit 7 Value	Float	-	-		RW
50173	2	Limit 7 Mode ≥/<	Unsigned long	-	0 =	Greater than	RW
					1 =	Lower than	
50175	2	Limit 8 ON / OFF	Unsigned long	-	0 =	OFF	RW
					1 =	ON	
50177	2	Limit 8 Hysteresis	Float	%	0.0 … 20.0		RW
50179	2	Limit 8 Pickup Delay	Unsigned long	s	0 … 10		RW
50183	2	Limit 8 Source	Unsigned long	-	0 … 241[2)]		RW
50185	2	Limit 8 Value	Float	-	-		RW
50187	2	Limit 8 Mode ≥/<	Unsigned long	-	0 =	Greater than	RW
					1 =	Lower than	
50189	2	Limit 9 ON / OFF	Unsigned long	-	0 =	OFF	RW
					1 =	ON	
50191	2	Limit 9 Hysteresis	Float	%	0.0 … 20.0		RW
50193	2	Limit 9 Pickup Delay	Unsigned long	s	0 … 10		RW
50197	2	Limit 9 Source	Unsigned long	-	0 … 241[2)]		RW
50199	2	Limit 9 Value	Float	-	-		RW
50201	2	Limit 9 Mode ≥/<	Unsigned long	-	0 =	Greater than	RW
					1 =	Lower than	

Offset	Number of registers	Name	Format	Unit	Value range		Access
50203	2	Limit 10 ON / OFF	Unsigned long	-	0 =	OFF	RW
					1 =	ON	
50205	2	Limit 10 Hysteresis	Float	%	0.0 … 20.0		RW
50207	2	Limit 10 Pickup Delay	Unsigned long	s	0 … 10		RW
50211	2	Limit 10 Source	Unsigned long	-	0 … 241[2)]		RW
50213	2	Limit 10 Value	Float	-	-		RW
50215	2	Limit 10 Mode ≥/<	Unsigned long	-	0 =	Greater than	RW
					1 =	Lower than	
50217	2	Limit 11 ON / OFF	Unsigned long	-	0 =	OFF	RW
					1 =	ON	
50219	2	Limit 11 Hysteresis	Float	%	0.0 … 20.0		RW
50221	2	Limit 11 Pickup Delay	Unsigned long	s	0 … 10		RW
50225	2	Limit 11 Source	Unsigned long		0 … 241[2)]		RW
50227	2	Limit 11 Value	Float	-	-		RW
50229	2	Limit 11 Mode ≥/<	Unsigned long	-	0 =	Greater than	RW
					1 =	Lower than	

[2)] You can find more information in chapter "Value range for limit source".

Offset	Number of registers	Name	Format	Unit	Value range		Access
50231	2	Date format	Unsigned long	-	0 =	dd.mm.yyyy	RW
					1 =	mm/dd/yy	
					2 =	yyyy-mm-dd	
50233	2	Daylight Saving	Unsigned long	-	0 =	No	RW
					1 =	Auto EU	
					2 =	Auto US	
					3 =	Table for individual time change	
50235	2	Time Zone	Long	min	MODULO(30)==0		RW
50237	2	Averaging Time Sliding Window Demands	Unsigned long	s	3, 5, 10, 30, 60, 300, 600, 900		RW
50239	2	Used Type of Reactive Power	Unsigned long	-	0 =	VARn	RW
					1 =	Q1	
					2 =	Qtot	
50241	2	Universal Counter 1 DI count signal	Unsigned long	-	Byte 2	Port	RW
					Byte 2	0 … 11	
					Byte 3	Bit	
					Byte 3	0 … 7	
50243	2	Current Direction L1	Unsigned long	-	0 =	Normal	RW
					1 =	Inverted	

Offset	Number of registers	Name	Format	Unit	Value range		Access
50245	2	Current Direction L2	Unsigned long	-	0 =	Normal	RW
					1 =	Inverted	
50247	2	Current Direction L3	Unsigned long	-	0 =	Normal	RW
					1 =	Inverted	
50249	2	Measuring Threshold Operating Hours Counter	Unsigned long	%	0 … 10		RW
50251	2	Universal Counter 2 Source	Unsigned long	-	0 =	DI	RW
					1 =	DO	
					2 =	Limit logic	
					3 =	Limit 0	
					4 =	Limit 1	
					5 =	Limit 2	
					6 =	Limit 3	
					7 =	Limit 4	
					8 =	Limit 5	
					9 =	Limit 6	
					10 =	Limit 7	
					11 =	Limit 8	
					12 =	Limit 9	
					13 =	Limit 10	
					14 =	Limit 11	
50253	2	Universal Counter 2 DI count signal	Unsigned long	-	Byte 2	Port	RW
					Byte 2	0 … 11	
					Byte 3	Bit	
					Byte 3	0 … 7	
50261	2	Default menu No.	Unsigned long	-	DISPLAYED MENU NUMBER:		RW
					1 MEAS_VLN		
					2 MEAS_VLL		
					3 MEAS_I		
					4 MEAS_S		
					5 MEAS_P		
					6 MEAS_Q		
					7 MEAS_SPQ		
					8 MEAS_PF		
					9 MEAS_PFSUM		
					10 MEAS_COS		
					11 MEAS_F		
					12 MEAS_THDU		
					13 MEAS_THDI		
					14 MEAS_PHASOR		
					15 HARMONICS_U		

Offset	Number of registers	Name	Format	Unit	Value range	Access
					16 HARMONICS_U_PHPH	
					17 HARMONICS_I	
					18 MEAS_WORK_S	
					19 MEAS_WORK_P	
					20 MEAS_WORK_Q	
					21 MEAS_COUNTER	
					22 MEAS_WORKHOUR	
					23 MEAS_IMBALPHASE	
					24 DIAGNOSTIC	
					25 USER_DEFINED_SCREEN_0	
					26 USER_DEFINED_SCREEN_1	
					27 USER_DEFINED_SCREEN_2	
					28 USER_DEFINED_SCREEN_3	
50263	2	Timeout for Returning to Default Menu	Unsigned long	-	0 … 3600 s	RW
50265	2	DHCP on/off	Unsigned long	-	0 … 1	RW
50267	2	Firewall on/off	Unsigned long	-	0 … 1	RW
50269	2	Nominal frequency	Unsigned long	-	0 … 4 0: AUTO 1: 50 Hz 2: 60 Hz	RW
50271	2	Voltage dip threshold	Float	%	0 … 100	RW
50273	2	Voltage dip hysteresis	Float	%	0 … 5	RW
50275	2	Voltage dip threshold	Float	%	100 … 120	RW
50277	2	Voltage swell hysteresis	Float	%	0 … 5	RW
50279	2	Interruption threshold	Float	%	0 … 100	RW
50281	2	Voltage interruption hyste-resis	Float	%	0 … 5	RW
50283	2	Nominal voltage	Float	-	0 … 999999	RW
50285	2	IP Filter Whitelist Entry #1 IP Network Address	Unsigned long	-	0..0xFFFFFFFF	RW
50287	2	IP Filter Whitelist Entry #1 IP Network Mask	Unsigned long	-	0..0xFFFFFFFF	RW
50289	2	IP Filter Whitelist Entry #1 Flags	Unsigned long	-	Bit0: Deactivated Bit1: Read MODBUS Bit2: Write MODBUS	RW

Offset	Number of registers	Name	Format	Unit	Value range	Access
50291	2	IP Filter Whitelist Entry #2 IP Network Address	Unsigned long	-	0..0xFFFFFFFF	RW
50293	2	IP Filter Whitelist Entry #2 IP Network Mask	Unsigned long	-	0..0xFFFFFFFF	RW
50295	2	IP Filter Whitelist Entry #2 Flags	Unsigned long	-	Bit0: Deactivated Bit1: Read MODBUS Bit2: Write MODBUS	RW
50297	2	IP Filter Whitelist Entry #3 IP Network Address	Unsigned long	-	0..0xFFFFFFFF	RW
50299	2	IP Filter Whitelist Entry #3 IP Network Mask	Unsigned long	-	0..0xFFFFFFFF	RW
50301	2	IP Filter Whitelist Entry #3 Flags	Unsigned long	-	Bit0: Deactivated Bit1: Read MODBUS Bit2: Write MODBUS	RW
50303	2	IP Filter Whitelist Entry #4 IP Network Address	Unsigned long	-	0..0xFFFFFFFF	RW
50305	2	IP Filter Whitelist Entry #4 IP Network Mask	Unsigned long	-	0..0xFFFFFFFF	RW
50307	2	IP Filter Whitelist Entry #4 Flags	Unsigned long	-	Bit0: Line enabled Bit1: Read MODBUS Bit2: Write MODBUS	RW
50309	2	IP Filter Whitelist Entry #5 IP Network Address	Unsigned long	-	0..0xFFFFFFFF	RW
50311	2	IP Filter Whitelist Entry #5 IP Network Mask	Unsigned long	-	0..0xFFFFFFFF	RW
50313	2	IP Filter Whitelist Entry #5 Flags	Unsigned long	-	Bit0: Deactivated Bit1: Read MODBUS Bit2: Write MODBUS	RW
50315	2	I(N) Display	Unsigned long	-	0: AUTO I(N) measured if I(N) module connected. I(N) calculated if no I(N) module connected 1: Displays calculated I(N) 2: I(N) hidden in current display	RW
61167	7	Digital Input Parameters	Unsigned long	-	uchar	RW
61175	7	Digital Output Parameters	stOutputPara	-	uchar	RW
62101	8	Event Recording Parameters	stEventPara	-	uchar	RW
62301	27	Logically Combined Limit Parameters	stCombLimitPara	-	-	RW

See also

Value range for limit source (Page 201)

A.2.15 Value range for limit source

Assignment of the value range for the Limit x Source parameter

Table A- 20 Assignment of the values 0 to 241

Value	Assignment
0	Voltage L1-N
1	Voltage L2-N
2	Voltage L3-N
3	Voltage L1-L2
4	Voltage L2-L3
5	Voltage L3-L1
6	Current L1
7	Current L2
8	Current L3
9	Apparent power L1
10	Apparent power L2
11	Apparent power L3
12	Active power L1
13	Active power L2
14	Active power L3
15	Reactive Power L1 (Qn)
16	Reactive power L2 (Qn)
17	Reactive power L3 (Qn)
18	Sliding Window Demand Voltage L1-N
19	Sliding Window Demand Voltage L2-N
20	Sliding Window Demand Voltage L3-N
21	Sliding Window Demand Voltage L1-L2
22	Sliding Window Demand Voltage L2-L3
23	Sliding Window Demand Voltage L3-L1
24	Sliding Window Demand Current L1
25	Sliding Window Demand Current L2
26	Sliding Window Demand Current L3
27	Sliding Window Demand Apparent Power L1
28	Sliding Window Demand Apparent Power L2
29	Sliding Window Demand Apparent Power L3
30	Sliding Window Demand Active Power L1
31	Sliding Window Demand Active Power L2
32	Sliding Window Demand Active Power L3
33	Sliding Window Demand Reactive Power L1 (Qn)
34	Sliding Window Demand Reactive Power L2 (Qn)
35	Sliding Window Demand Reactive Power L3 (Qn)

Value	Assignment
36	Sliding Window Demand Total Reactive Power L1 (Qtot)
37	Sliding Window Demand Total Reactive Power L2 (Qtot)
38	Sliding Window Demand Total Reactive Power L3 (Qtot)
39	Sliding Window Demand Reactive Power L1 (Q1)
40	Sliding Window Demand Reactive Power L2 (Q1)
41	Sliding Window Demand Reactive Power L3 (Q1)
42	Sliding Window Demand Power Factor L1
43	Sliding Window Demand Power Factor L2
44	Sliding Window Demand Power Factor L3
45	Power factor L1
46	Power factor L2
47	Power factor L3
48	THD voltage L1
49	THD voltage L2
50	THD voltage L3
51	THD current L1
52	THD current L2
53	THD current L3
54	THD voltage L1-L2
55	THD voltage L2-L3
56	THD voltage L3-L1
57	Reactive power L1 (Q1)
58	Reactive power L2 (Q1)
59	Reactive power L3 (Q1)
60	Total Reactive Power L1 (Qtot)
61	Total Reactive Power L2 (Qtot)
62	Total Reactive Power L3 (Qtot)
63	Cos φ L1
64	Cos φ L2
65	Cos φ L3
66	Distortion current L1
67	Distortion current L2
68	Distortion current L3
69	Phase angle L1-L1
70	Phase angle L1-L2
71	Phase angle L1-L3
72	Displacement Angle L1
73	Displacement Angle L2
74	Displacement Angle L3
75	Line Frequency
76	3-phase average voltage L-N
77	3-phase average voltage L-L

Value	Assignment
78	3-Phase Average Current
79	Total Apparent Power
80	Total Active Power
81	Total Reactive Power (Qn)
82	Total Reactive Power (VAR1)
83	Total Reactive Power (Qtot)
84	Sliding Window Demand Total Apparent Power
85	Sliding Window Demand Total Active Power
86	Sliding Window Demand Total Power Factor
87	Sliding Window Demand Total Reactive Power (Qn)
88	Sliding Window Demand Total Reactive Power (Q1)
89	Sliding Window Demand Total Reactive Power (Qtot)
90	Total Power Factor
91	Amplitude Unbalance Voltage
92	Amplitude Unbalance Current
93	Unbalance Voltage
94	Unbalance Current
95	Neutral Current
96	Sliding Window Demand Neutral Current
97	Fundamental Voltage L1-N
98	Fundamental Voltage L2-N
99	Fundamental Voltage L3-N
100	3rd Harmonic Voltage L1-N
101	3rd Harmonic Voltage L2-N
102	3rd Harmonic Voltage L3-N
103	5th Harmonic Voltage L1-N
104	5th Harmonic Voltage L2-N
105	5th Harmonic Voltage L3-N
106	7th Harmonic Voltage L1-N
107	7th Harmonic Voltage L2-N
108	7th Harmonic Voltage L3-N
109	9th Harmonic Voltage L1-N
110	9th Harmonic Voltage L2-N
111	9th Harmonic Voltage L3-N
112	11th Harmonic Voltage L1-N
113	11th Harmonic Voltage L2-N
114	11th Harmonic Voltage L3-N
115	13th Harmonic Voltage L1-N
116	13th Harmonic Voltage L2-N
117	13th Harmonic Voltage L3-N
118	15th Harmonic Voltage L1-N
119	15th Harmonic Voltage L2-N

Value	Assignment
120	15th Harmonic Voltage L3-N
121	17th Harmonic Voltage L1-N
122	17th Harmonic Voltage L2-N
123	17th Harmonic Voltage L3-N
124	19th Harmonic Voltage L1-N
125	19th Harmonic Voltage L2-N
126	19th Harmonic Voltage L3-N
127	21st Harmonic Voltage L1-N
128	21st Harmonic Voltage L2-N
129	21st Harmonic Voltage L3-N
130	23rd Harmonic Voltage L1-N
131	23rd Harmonic Voltage L2-N
132	23rd Harmonic Voltage L3-N
133	25th Harmonic Voltage L1-N
134	25th Harmonic Voltage L2-N
135	25th Harmonic Voltage L3-N
136	27th Harmonic Voltage L1-N
137	27th Harmonic Voltage L2-N
138	27th Harmonic Voltage L3-N
139	29th Harmonic Voltage L1-N
140	29th Harmonic Voltage L2-N
141	29th Harmonic Voltage L3-N
142	31st Harmonic Voltage L1-N
143	31st Harmonic Voltage L2-N
144	31st Harmonic Voltage L3-N
145	Fundamental Voltage L1-L2
146	Fundamental Voltage L2-L3
147	Fundamental Voltage L3-L1
148	3rd Harmonic VoltageL1-L2
149	3rd Harmonic Voltage L2-L3
150	3rd Harmonic Voltage L3-L1
151	5th Harmonic Voltage L1-L2
152	5th Harmonic Voltage L2-L3
153	5th Harmonic Voltage L3-L1
154	7th Harmonic Voltage L1-L2
155	7th Harmonic Voltage L2-L3
156	7th Harmonic Voltage L3-L1
157	9th Harmonic Voltage L1-L2
158	9th Harmonic Voltage L2-L3
159	9th Harmonic Voltage L3-L1
160	11th Harmonic Voltage L1-L2
161	11th Harmonic Voltage L2-L3

Value	Assignment
162	11th Harmonic Voltage L3-L1
163	13th Harmonic Voltage L1-L2
164	13th Harmonic Voltage L2-L3
165	13th Harmonic Voltage L3-L1
166	15th Harmonic Voltage L1-L2
167	15th Harmonic Voltage L2-L3
168	15th Harmonic Voltage L3-L1
169	17th Harmonic Voltage L1-L2
170	17th Harmonic Voltage L2-L3
171	17th Harmonic Voltage L3-L1
172	19th Harmonic Voltage L1-L2
173	19th Harmonic Voltage L2-L3
174	19th Harmonic Voltage L3-L1
175	21st Harmonic VoltageL1-L2
176	21st Harmonic Voltage L2-L3
177	21st Harmonic Voltage L3-L1
178	23rd Harmonic Voltage L1-L2
179	23rd Harmonic Voltage L2-L3
180	23rd Harmonic Voltage L3-L1
181	25th Harmonic Voltage L1-L2
182	25th Harmonic Voltage L2-L3
183	25th Harmonic Voltage L3-L1
184	27th Harmonic Voltage L1-L2
185	27th Harmonic Voltage L2-L3
186	27th Harmonic Voltage L3-L1
187	29th Harmonic Voltage L1-L2
188	29th Harmonic Voltage L2-L3
189	29th Harmonic Voltage L3-L1
190	31st Harmonic Voltage L1-L2
191	31st Harmonic Voltage L2-L3
192	31st Harmonic Voltage L3-L1
193	Fundamental Current L1
194	Fundamental Current L2
195	Fundamental Current L3
196	3rd Harmonic Current L1
197	3rd Harmonic Current L2
198	3rd Harmonic Current L3
199	5th Harmonic Current L1
200	5th Harmonic Current L2
201	5th Harmonic Current L3
202	7th Harmonic Current L1
203	7th Harmonic Current L2

Value	Assignment
204	7th Harmonic Current L3
205	9th Harmonic Current L1
206	9th Harmonic Current L2
207	9th Harmonic Current L3
208	11th Harmonic Current L1
209	11th Harmonic Current L2
210	11th Harmonic Current L3
211	13th Harmonic Current L1
212	13th Harmonic Current L2
213	13th Harmonic Current L3
214	15th Harmonic Current L1
215	15th Harmonic Current L2
216	15th Harmonic Current L3
217	17th Harmonic Current L1
218	17th Harmonic Current L2
219	17th Harmonic Current L3
220	19th Harmonic Current L1
221	19th Harmonic Current L2
222	19th Harmonic Current L3
223	21st Harmonic Current L1
224	21st Harmonic Current L2
225	21st Harmonic Current L3
226	23rd Harmonic Current L1
227	23rd Harmonic Current L2
228	23rd Harmonic Current L3
229	25th Harmonic Current L1
230	25th Harmonic Current L2
231	25th Harmonic Current L3
232	27th Harmonic Current L1
233	27th Harmonic Current L2
234	27th Harmonic Current L3
235	29th Harmonic Current L1
236	29th Harmonic Current L2
237	29th Harmonic Current L3
238	31st Harmonic Current L1
239	31st Harmonic Current L2
240	31st Harmonic Current L3
241	Process operating hours counter
242	I(N) Module Slot 1*)
243	I5 Module Slot 1*)
244	I6 Module Slot 1*)
245	I(N) Module Slot 2*)

Value	Assignment
246	I5 Module Slot 2*)
247	I6 Module Slot 2*)

*) Only if an "I(N), I(diff), analog expansion module" is used.

See also

Configuration settings with the function codes 0x03, 0x04, and 0x10 (Page 192)

A.2.16 Communication settings with the function codes 0x03, 0x04, and 0x10

Addressing the communication settings

Table A- 21 Communication settings

Offset	Number of registers	Name	Format	Unit	Applicable MODBUS function codes	Value range	Access
62983	2	Aggregation file 1 (period length)	Unsigned long	s	• 0x03 • 0x04 • 0x10	>3 s	RW
62985	2	Aggregation file 1 (method)	Unsigned long	-	• 0x03 • 0x04 • 0x10	0: AUTO 1: RMS 2: ARITHMETIC	RW
62987	2	Aggregation file 2 (period length)	Unsigned long	s	• 0x03 • 0x04 • 0x10	>3 s	RW
62989	2	Aggregation file 2 (method)	Unsigned long	-	• 0x03 • 0x04 • 0x10	0: AUTO 1: RMS 2: ARITHMETIC	RW
62991	2	Aggregation file 3 (period length)	Unsigned long	s	• 0x03 • 0x04 • 0x10	>3 s	RW
62993	2	Aggregation file 3 (method)	Unsigned long	-	• 0x03 • 0x04 • 0x10	0: AUTO 1: RMS 2: ARITHMETIC	RW
63001	2	IP Address	Unsigned long	-	• 0x03 • 0x04 • 0x10	0 … FFFFFFFFh	RW

Offset	Number of registers	Name	Format	Unit	Applicable MODBUS function codes	Value range		Access
63003	2	Subnetmask	Unsigned long	-	• 0x03 • 0x04 • 0x10	0 … FFFFFFFFh		RW
63005	2	Gateway	Unsigned long	-	• 0x03 • 0x04 • 0x10	0 … FFFFFFFFh		RW
63007	2	Bootloader Version	Unsigned long	-	• 0x03 • 0x04	char, uchar, uchar, uchar		R
63009	2	Password Protec-tion ON/OFF	Unsigned long	-	• 0x03 • 0x04	0 =	OFF	R
						1 =	ON	
63011	2	Manufacturing Date	Unsigned long	-	• 0x03 • 0x04 • 0x10	[Date information]		R
63015	2	Ethernet Protocol	Unsigned long	-	• 0x03 • 0x04 • 0x10	0 =	MODBUS T CP	RW
63017	2	Protocol Module Interface 1	Unsigned long	-	• 0x03 • 0x04 • 0x10	0 =	MODBUS T CP	RW
						1 =	SEAbus serial	
						2 =	Serial gateway	
						3 =	Modbus gateway	
63019	2	Address Module Interface 1	Unsigned long	-	• 0x03 • 0x04 • 0x10	1 … 247		RW
63021	2	Baudrate Module Interface 1	Unsigned long	-	• 0x03 • 0x04 • 0x10	0 =	4800 baud	RW
						1 =	9600 baud	
						2 =	19 200 baud	
						3 =	38 400 baud	
						4 =	57 600 baud	
						5 =	115 200 baud	

Offset	Number of registers	Name	Format	Unit	Applicable MODBUS function codes	Value range		Access
63023	2	Format Module Interface 1	Unsigned long	-	• 0x03 • 0x04 • 0x10	0 =	8N2	RW
						1 =	8E1	
						2 =	8O1	
						3 =	8N1	
63025	2	Response Time Module Interface 1	Unsigned long	ms	• 0x03 • 0x04 • 0x10	0 … 255		RW
63033	2	Protocol Module Interface 2	Unsigned long	-	• 0x03 • 0x04 • 0x10	0 =	MODBUS R TU	RW
						1 =	SEAbus serial	
						2 =	Serial gateway	
						3 =	Modbus gateway	
63035	2	Address Module Interface 2	Unsigned long	-	• 0x03 • 0x04 • 0x10	1 … 247		RW
63037	2	Baud rate Module Interface 2	Unsigned long	-	• 0x03 • 0x04 • 0x10	0 =	4800 baud	RW
						1 =	9600 baud	
						2 =	19 200 bau d	
						3 =	38 400 bau d	
						4 =	57 600 bau d	
						5 =	115 200 baud	
63039	2	Format Module Interface 2	Unsigned long	-	• 0x03 • 0x04 • 0x10	0 =	8N2	RW
						1 =	8E1	
						2 =	8O1	
						3 =	8N1	
63041	2	Response Time Module Interface 2	Unsigned long	ms	• 0x03 • 0x04 • 0x10	0 … 255		RW
63043	2	TCP/IP port gate-way module inter-face 1	Unsigned long	ms	• 0x03 • 0x04 • 0x10	1-ffffh		RW

Offset	Number of registers	Name	Format	Unit	Applicable MODBUS function codes	Value range	Access
63045	2	TCP/IP Port Gateway Module Interface 2	Unsigned long	ms	• 0x03 • 0x04 • 0x10	1-ffffh	RW
63065	2	ID PAC4200	Unsigned long	-	• 0x03 • 0x04	8173h	R

A.2.17 I&M settings

Addressing the settings for the I&M data

Table A- 22 Settings for the I&M data

Offset	Number of registers	Name	Format	Unit	Applicable MODBUS function codes	Value range	Access
64001	27	IM 0 Data PAC4200	stIM0	-	• 0x03 • 0x04	-	R(W)
64028	89	IM 1 to IM 4 Data PAC4200	stIM14	-	• 0x03 • 0x04 • 0x10	-	RW
64117	27	IM Data Module Interface 1	stIM0-	-	• 0x03 • 0x04	-	R(W)
64144	27	IM Data Module Interface 2	stIM0	-	• 0x03 • 0x04	-	R(W)

A.2.18 Commands with the function code 0x06

Addressing the commands

Table A- 23 Commands

Offset	Number of registers	Name	Format	Applicable MODBUS function codes	Value range		Access
60002	1	Reset maximum values	Unsigned short	0x06	0		W
60003	1	Reset minimum values	Unsigned short	0x06	0		W
60004	1	Reset energy counters	Unsigned short	0x06	0 =	All	W
					1 =	Active energy import tariff 1	
					2 =	Active energy import tariff 2	
					3 =	Active energy export tariff 1	
					4 =	Active energy export tariff 2	
					5 =	Reactive energy import tariff 1	
					6 =	Reactive energy import tariff 2	
					7 =	Reactive energy export tariff 1	
					8 =	Reactive energy export tariff 2	
					9 =	Apparent energy tariff 1	
					10 =	Apparent energy tariff 2	
					11 =	Process active energy	
					12 =	Process reactive energy	
					13 =	Process apparent energy	
60005	1	Synchronization of demand period	Unsigned short	0x06	1 … 60 min		W
60006	1	Switching tariff	Unsigned short	0x06	0 =	On-peak tariff	W
					1 =	Off-peak tariff	
60007	1	Acknowledge diagnostics bits	Unsigned short	0x06	0-ffffh		W

Offset	Number of registers	Name	Format	Applicable MODBUS function codes	Value range		Access
60008	1	Switching outputs (if parameterized)	Unsigned short	0x06	Byte 0 Bit 4 and Bit 7	Ports 0 ... 11	W
					Byte 0 Bits 0 ... 3	Port bit number 0 … 7	
					Byte 1 = 0	Output port. Port bit number OFF	
					Byte 1 = 1	Output port. Port bit number ON	
60009	1	Switching command for vector group	Unsigned short	0x06	Hi 0 ... 99, Lo 0 ... 1		W
					HiByte	Group assignment	
					LoByte	0 = ON 1 = OFF	
60010	1	Resetting the day energy counter	Unsigned short	0x06	815		W
60011	1	Reset load profile recording	Unsigned short	0x06	815		W
60012	1	Reset event recording	Unsigned short	0x06	815		W
60013	1	Set standard event recording conditions	Unsigned short	0x06	815		W
60014	1	Set standard I/O parameters	Unsigned short	0x06	815		W
65292	2	Increment date/time	Unsigned long	**0x10**	1-FFFFFFFFh[1)]		W

[1)] Time stamp low → adds the time stamp low to the current date and the current time

A.2.19 MODBUS standard device identification with the function code 0x2B

Addressing the MODBUS standard device identification

You can use MODBUS function code 0x2B on these device identification parameters.

Table A- 24 MODBUS standard device identification parameters

Object ID	Name	Format	Access
OID 0	Manufacturer	String	R
OID 1	Manufacturer device name	String	R
OID 2	Firmware version / bootloader version	String	R

See also

Measured variables without a time stamp with the function codes 0x03 and 0x04 (Page 146)

A.3 Comprehensive support from A to Z

For more information, please see the following links:

Useful links

Table A- 25 Product information

Website	The website provides rapid and targeted information on our pioneering products and systems.	Link (http://www.siemens.com/lowvoltage)
Newsletter	Constantly updated information on the subject of low-voltage power distribution.	Link (http://www.siemens.com/lowvoltage/newsletter)

Table A- 26 Product information / product and system selection

Information and Download Center	• Current catalogs • Customer magazines • Brochures • Demonstration software • Promotion packages	Link (http://www.siemens.com/lowvoltage/infomaterial)

Table A- 27 Product and system selection

Industry Mall	Platform for e-business and product information. 24/7 access to a comprehensive information and ordering platform for our complete low-voltage controls and distribution portfolio, etc.: • Selection tools • Product and system configurators • Availability check • Order tracking	Link (http://www.siemens.com/lowvoltage/mall)

Table A- 28 Product documentation

Service & Support Portal	Comprehensive technical information from the planning phase through configuration to operation. Around the clock. 365 days a year. • Product data sheets • Manuals / operating instructions • Certificates • Characteristic curves • Downloads • FAQs	Link (http://www.siemens.com/lowvoltage/support)
CAx DVD	Configuration-relevant CAx data on SENTRON is available on DVD: • Commercial and technical product master data • 2D dimension drawings • Isometric illustrations • 3D models • Product data sheets • Tender specifications	Link (http://www.siemens.com/lowvoltage/mall) Article number: E86060-D1000-A207-A6-6300
Image Database	Free downloads in several different versions are available from the image database: • All current product photos • 2D dimension drawings • Isometric illustrations • 3D models • Device circuit diagrams • Symbols	Link (http://www.siemens.com/lowvoltage/picturedb)

Table A- 29 Product training

SITRAIN Portal	Comprehensive training program to expand your knowledge about our products, systems, and engineering tools	Link (http://www.siemens.com/lowvoltage/training)

List of abbreviations

B

B.1 Abbreviations

Overview

Table B- 1 Meaning of abbreviations

Abbreviation	Meaning
ANSI	American National Standards Institute
AWG	American Wire Gauge
CE	Communautés Européennes (French for "European Union")
CSA	Canadian Standards Association
DIN	Deutsches Institut für Normierung e. V.
DP	Distributed I/Os
EC	European Union
ESD	Electrostatic sensitive devices
EIA	Electronic Industries Alliance
EMC	Electromagnetic compatibility
EN	European Standard
EU	European Union
FCC	Federal Communications Commission
GSD	Device master data
ON-P/OFF-P	On-peak/off-peak tariff
I&M	Information and Maintenance
ID	Identification number
IEC	International Electrotechnical Commission
IP	International Protection
ISO	International Standardization Organization
MAC	Media Access Control
NAFTA	North American Free Trade Agreement
NEMA	National Electrical Manufacturers Association
CEST	Central European Summertime
PAC	Power Analysis & Control
RJ	Registered Jack
Ring lug terminals	Ring lug terminals
RS	Formerly: Radio Selector; now usually: Recommended Standard
RTU	Remote Terminal Unit
TCP/IP	Transmission Control Protocol/Internet Protocol
THD	Total Harmonic Distortion; German: Gesamte Harmonische Verzerrung

Abbreviation	Meaning
THD-R	Relative THD
TIA	Totally Integrated Automation
TRMS	True Root Mean Square
UL	Underwriters Laboratories Inc.
RLO	Result of logic operation

Glossary

100BaseT

Fast Ethernet standard (100 Mbit/s) for data transmission on twisted-pair cables.

10BaseT

Standard for the transmission of 10 Mbit/s Ethernet on twisted-pair cables.

Autonegotiation

Ability of a device to automatically detect the fastest possible transmission rate, and to send and receive at this rate.

AWG

American Wire Gauge (AWG) is a specification for wire diameters that is mainly used in North America.

Bus

Shared transmission path over which all devices on the communication bus are connected. It has two defined ends. In the case of PROFIBUS, the bus is a twisted pair or optical fiber cable.

Bus system

All nodes physically connected to a bus cable form a bus system.

Demand period

Period to which the calculation of the power demand refers. A demand period is typically 15, 30, or 60 minutes long.

A distinction is made between the actual period and the instantaneous period. The actual period is the last completed period. The instantaneous period is the period still in progress and has not yet been completed.

Equipotential bonding

Electrical connection (equipotential bonding conductor) which brings the bodies of electronic equipment and foreign conductive bodies to an equal or approximately equal potential. This prevents disruptive or dangerous voltages between these conductive parts.

Firmware

Device operating software. The firmware is stored in the device's electronic components.

Load profile memory

Device data memory for storing performance data, including associated identifying characteristics such as a time stamp.

MDI-X auto crossover

Ability of the interface to detect the send and receive lines of the connected device autonomously and adjust to them. This prevents malfunctions resulting from mismatching send and receive lines. Both crossed and uncrossed cables can be used.

PROFIBUS

PROCESS FIELD BUS, a European process and fieldbus standard defined in the PROFIBUS standard EN 50170, Volume 2, PROFIBUS. Specifies the functional, electrical and mechanical characteristics of a serial bit stream fieldbus system.

PROFIBUS is a bus system that connects PROFIBUS-compatible automation systems and field devices together at the cell level and field level.

RJ45

Symmetrical connector for data lines that is also known as a Western connector or a Western plug. This is a widely used plug connector in telephone and ISDN technology which is used in LAN installations in the office environment.

RMS

Root-mean-square value of a signal that changes as a function of time.

TCP/IP

Transport Control Protocol/Internet Protocol, the de-facto standard; protocol for worldwide communication over Ethernet.

Twisted pair

Data cable with twisted-wire pairs; the twist in the wire pairs provides good transmission properties and prevents electromagnetic interference. Twisted-pair cables are available in different qualities for different transmission rates.

UTC

Universal Time Coordinated. International reference time to which the worldwide time zone system refers. Has replaced Greenwich Mean Time (GMT).

Index

A

AC current, 72
Acknowledgable events, 82
Alternating current measurement, 16
Alternating voltage measurement, 16
Applying the measuring current, 72
Applying the measuring voltage, 71
Arc flashover, 57

B

Battery, 47, 130
Battery compartment, 42, 47, 125
Bit mask, 153, 155

C

Circuit breaker, 46
Cleaning, 121
Clearance dimensions, 48, 143
Clearances, 143
Communication, 132
Components of the product, 7
Connection elements, 133
Connection examples, 58
Connection type, 17
    Check, 72
Current measurement, 16
Current measuring inputs
    Protecting, 57
Current transformers, 72

D

Degree of protection, 136
Deinstallation, 51
Detergents, 121
Device identification parameters, 212
Digital input, 130
Digital output, 131
Dimensions, 141
    Clearance dimensions, 143
    Clearances, 143
    Frame dimensions, 142
    Panel cutout, 141
    Ring lug, 134
Direction of current flow, 72
Disposal, 126

E

Error code, 146
Ethernet cable, 65
Ethernet ports, 132
Event recording, 82
Events
    Acknowledgable, 82
    Settings in the SENTRON software, 85
Extra-low voltage power supply, 16, 68, 71

F

Fail-safe power supply, 122
Firmware update, 122
    Duration, 122
Fixed block method, 192
Frame dimensions, 142
Function code, 155, 192, 212

G

General safety notes, 9
Grounding, 57, 65

H

Humidity, 121

I

Information, 7

L

Limit source
    Value range, 201
Limit value, 71, 154
    Definition, 34
    Logic combination, 34
Limit values, 34
Limit violation, 34, 154
    Output, 35
Load profile, 23
Loss of warranty, 126

M

Measuring accuracy, 129
Measuring category, 128
Measuring method, 127
Memory, 130
Modbus
    Digital Inputs, Status, 153
    Digital Outputs, Status, 153
    Function code, 146
Modbus function code, 156, 212
Modbus gateway, 41, 132
MODBUS measured variables, 146
Moisture, 121
Mounting dimensions, 48, 141
Mounting location, 45
Mounting on the switching panel, 49
Mounting position, 46

N

Neutral conductor, 56

O

Object ID, 212
Offset, 154, 193, 195, 197
Open terminals, 55

P

Panel cutout
    Dimensions, 141
Parameterizing
    Device settings, 89
Parameters
    Device information, 212
Password, 122
Phase-synchronous connection, 57
Phasor diagram, 79
PMD diagnostics and status, 155
Power consumption, 129
Power demand, 26
Power failure, 122
Prerequisites
    Startup, 67
Procedure
    Installation, 49
Pulse length, 36

R

Rating plate, 68, 71
Reference potential, 57
Register, 154, 193, 195, 197
Repair, 126
Replacing the battery, 123
Ring lug
    Dimensions, 134
Ring lug terminal, 49
    Terminal labeling, 56
Ring lug terminals
    Technical data, 134
Rolling block method, 192

S

Safety class, 136
Safety-related symbols on the device, 10
Screw terminal, 49
    Technical data, 135
    Terminal labeling, 55
Screwdriver, 48, 51
Shield, 65
Slot for expansion module, 39
Startup, 67
    Prerequisites, 67
Strain relief, 65
Supply voltage, 68, 126, 129
    Fail-safe, 122
    Protecting, 58
Switching panel, 45, 49

T

Tariffs, 30
Terminal labeling, 55
Third-party software, 7
Tools, 48, 51, 123
Turn-off time, 36

V

Voltage measurement, 16
Voltage measuring inputs
    Protecting, 58
Voltage transformers, 71

W

Weight, 136
Wetness, 121
Wide-voltage power supply, 16, 68, 71

Z

Zero point suppression level, 22

Further Information

Always at your disposal: our extensive support
www.siemens.com/online-support

Siemens AG
Smart Infrastructure
Low Voltage & Products
Postfach 10 09 53
93009 REGENSBURG
Germany

Subject to change.
3ZX1012-0KM42-3AC0
© Siemens AG 2019

SI LP
Online