UWPA, UWPM

Long-range wireless gateway: endpoint adapter and master concentrator

Benefits

- **Long range communication**. Up to 10 km range in open air, 1 km in typical applications.
- **Low operating expenses.** Wireless solution (EU 868 MHz ISM band) with no SIM card or annual fees.
- **Easy and fast configuration** via free software.
- **Easy commissioning and diagnostics** thanks to the push button for communication test.
- **Security**. Embedded end-to-end AES128 encryption.
- **Reliable communication** thanks to high-performance antenna, interferences/obstacles immunity and downlink server acknowledge.
- **Compatibility**. It permits to interface a Carlo Gavazzi meter and analyser with standard third-party LoRaWAN® networks or with UWP 3.0 platform.

Description

UWPA is an endpoint adapter that provides LoRa® or LoRaWAN® communication to an RS485 Carlo Gavazzi meter. UWPM is a master concentrator that permits UWP 3.0 to gather data from multiple UWPA.

Applications

Energy efficiency monitoring and energy cost allocation, sub-metering in large buildings, big facilities, farms and city areas are the best use cases for long range wireless Carlo Gavazzi systems. Thanks to LoRa®/ LoRaWAN® long communication range, security and robustness, wireless networks can be easily set-up, without high expenses due to the use of SIM cards or repeaters.

Main functions

- LoRa®/LoRaWAN® communication for a RS485 Carlo Gavazzi meter and analyser (UWPA)
- Plug'n play commissioning of a long-range wireless monitoring system based on UWP 3.0 (UWPA+UWPM)
- Integration of pulse output meters (electricity, gas and water) in combination with VMU-MC/OC.

Architecture (private UWP network)

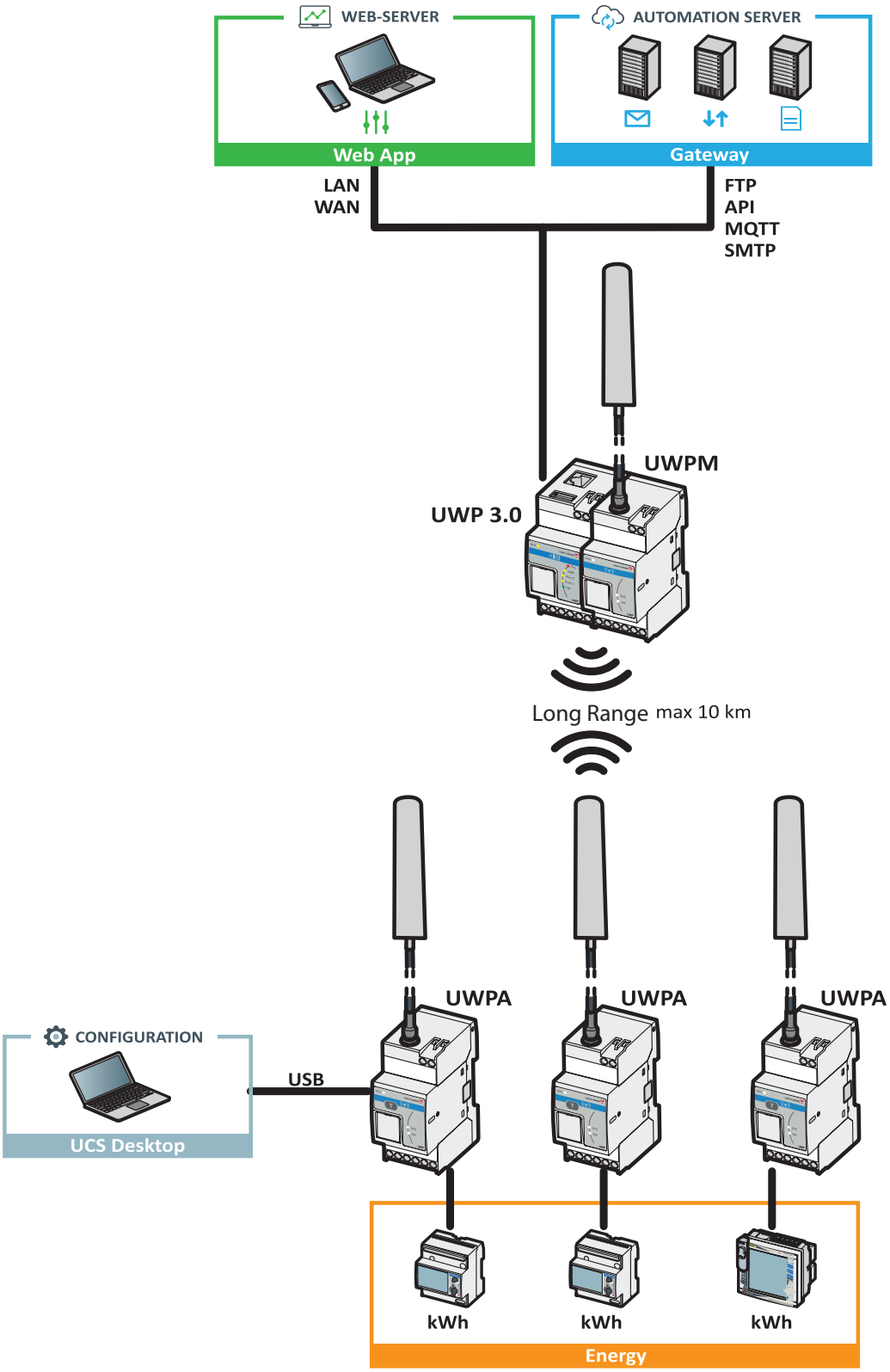

Architecture (LoRaWAN® network)

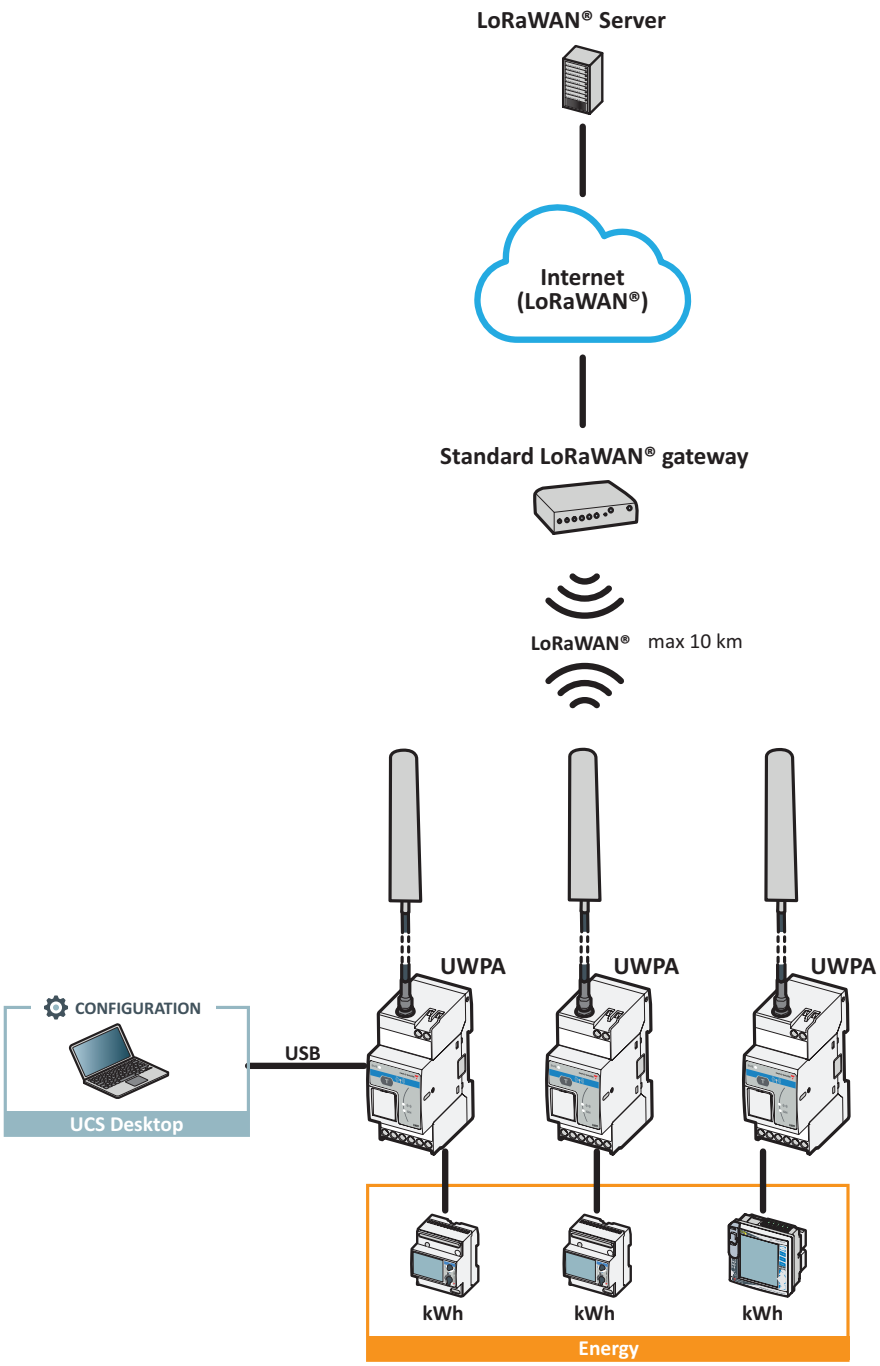

Main features

- Compatibility with generic LoRaWAN® Gateways/Servers/Networks (UWPA)
- Full ownership of data with no need to rely on any wireless/cloud operator (UWPA+UWPM)
- EU 868 MHz ISM band communication
- Up to 50 UWPA per UWPM (max. 3 UWPM per UWP 3.0)

UCS (Universal configuration software) specifications

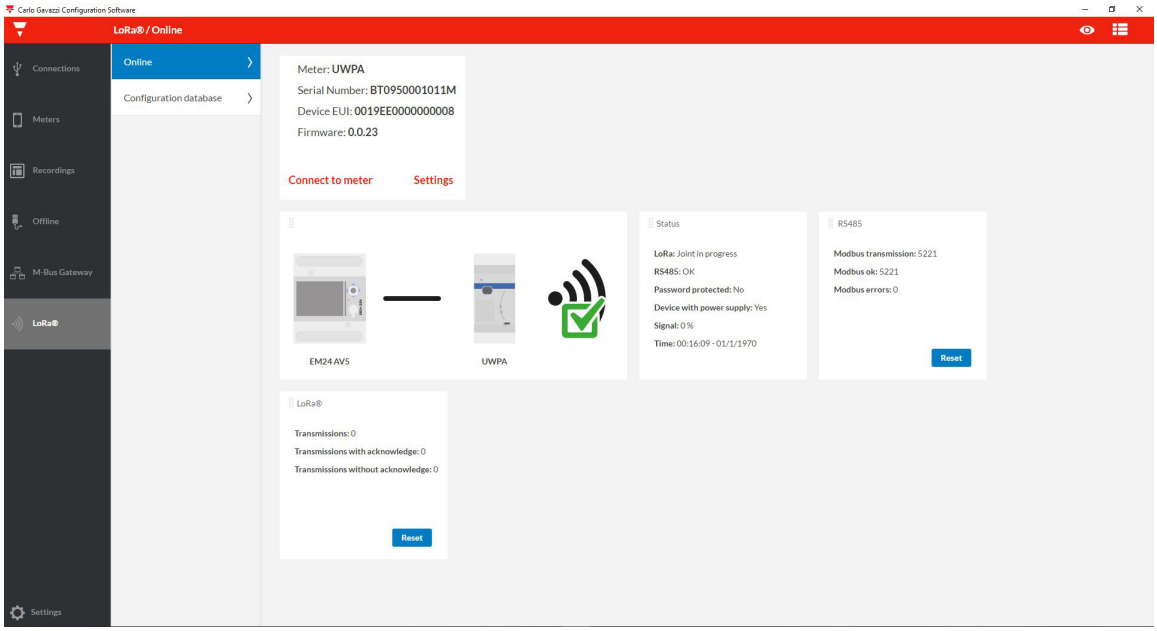

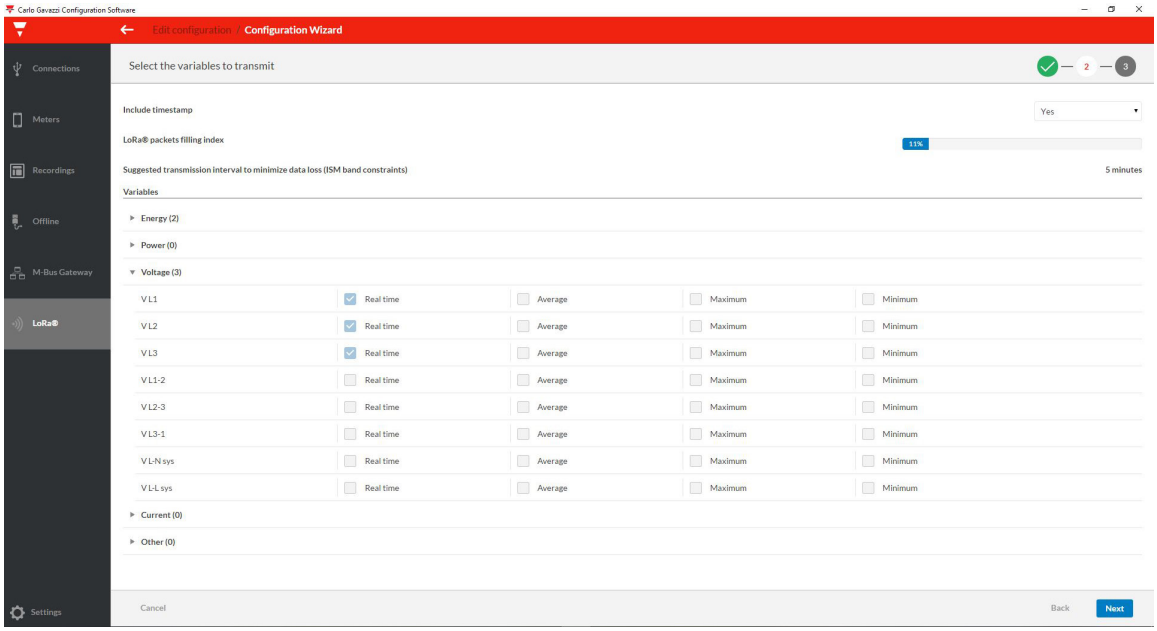

- Free software, compatible with Windows® PCs
- Intuitive user interface
- The same software for configuring UWPA and a Carlo Gavazzi meter
- UWPA password management for protecting your LoRa®/LoRaWAN® network
- Configurations database for helping system integrators
- Real time diagnostics and datalogging
- Export of .csv or Excel files from the configured devices list for an easy integration into LoRaWAN® network
- Export of the configured devices file for the UWP network to import into UWP 3.0

Conformity

Directives	2014/53/EU (RED) 2011/65/EU (RoHS) 2015/865/EU (RoHS)
Standards	Electromagnetic compatibility (EMC) - Immunity EN61000-6-2 Electromagnetic compatibility (EMC) - Emission EN61000-6-3 EN60950-1 ETSI EN 300 220-1 ETSI EN 300 220-2 EN62479
Approvals	CE LoRaWAN CERTIFIED
Certifications	LoRaWAN Certified CM (only UWPA)

UWPA

Wireless endpoint gateway

Main features

- Gateway from RS485 to LoRa®/LoRaWAN® for Carlo Gavazzi meters (one meter for each UWPA)
- USB port for easy set-up via UCS Software
- Universal power supply
- Configurable LoRaWAN® communication
- OTAA or ABP authentication
- Long communication range (10 km in open air, from 200 m to 3 km in typical applications)
- Communication interval from 5 min to 24 h
- Remote diagnostics via LoRa® RF technology communication
- LED indication of operating status

Description

UWPA is a device to be connected to a Carlo Gavazzi meter via RS485. The resulting system transmits measured data either to standard third-party LoRaWAN® systems or to the UWPM concentrator using LoRa® technology.

Applications

Energy efficiency monitoring and energy cost allocation, sub-metering in large buildings, big facilities, farms and city areas are the best use cases for long range wireless Carlo Gavazzi systems. Thanks to LoRa®/LoRaWAN® long communication range, security and robustness, wireless networks can be easily set-up, without high expenses due to the use of SIM cards or repeaters.

Main functions

- LoRa®/LoRaWAN® communication for RS485 Carlo Gavazzi meters and analyzers
- Plug'n play commissioning of a LoRa®-based monitoring system based on UWP 3.0 (in combination with UWPM)
- Compatibility with standard third-party LoRaWAN® Gateways/Servers/Networks
- Full ownership of data with no need to rely on any wireless/cloud operator (in combination with UWPM)
- Local diagnostics thanks to micro-USB connection and dashboard displaying the status in UCS software
- Communication test via push button

Structure

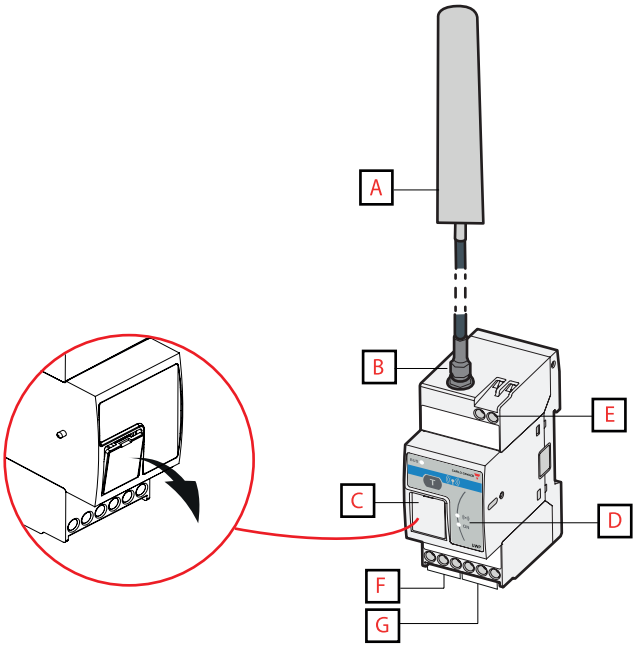

Area	Description
A	High-performance antenna
B	Antenna connector
C	USB port
D	LEDs: Green: Power supply Yellow: RS485 Blue: LoRa®
E	Power supply connection block
F	Terminals for RS485 connection to meter
G	Terminals for RS485 termination

Special functions

- Meter auto scan via RS485
- Powered by USB for setting up without an external power supply
- Password protected configuration
- The same software (UCS) to configure both UWPA and connected device
- Adapter firmware upgrade: user can select the firmware file and activate the firmware upgrade procedure
- Clock synchronization with server time via wireless downlink

LED indication

Colour	Status LED	Description
Green	ON	Power supply OK
	OFF	No Power supply
	Fast Blinking	Hardware failure
Yellow	ON	Communication in progress without errors
	OFF	Communication disabled
	Slow blinking	Meter auto scan in progress
	Fast blinking	Not valid meters or communication error
Blue	ON	Push button disabled to comply with ISM band restrictions on duty cycle
	OFF	LoRa® RF technology communication disabled or network joint successfully executed (waiting for the next communication)
	Slow blinking	Communication in progress
	Fast blinking	Network joint not executed or communication failed

Features

General

Material	Noryl, self-extinguishing V-0 (UL 94)
Protection degree	Front: IP50 Terminals: IP20
Terminals	Cable Section: 1.5 mm^2 Torque: from 0.4 to 0.8 Nm
Mounting	DIN rail
Dimensions	2-DIN module
Weight (packaging included)	520 g
Antenna cable length	2 m
Antenna dimensions	See picture 2

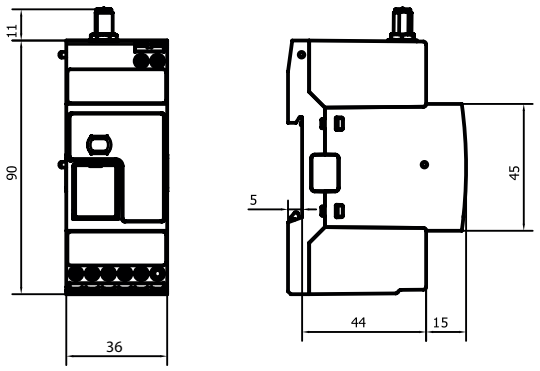

Fig. 1 *UWPA dimensions*

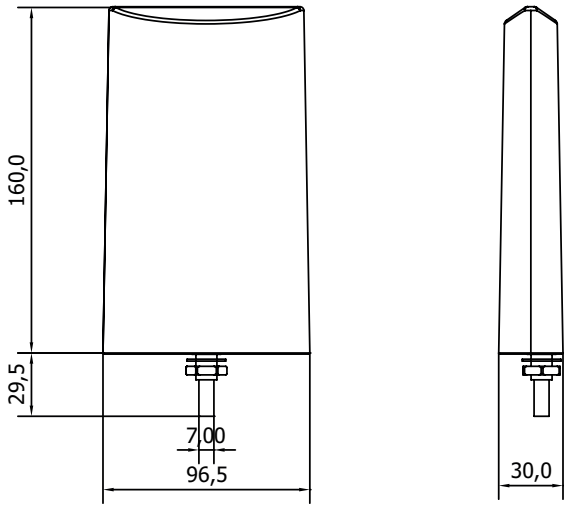

Fig. 2 *High-performance antenna dimensions*

Power supply

Power supply	24 V dc +/-20% 115-240 V ac 50/60 Hz +/-10%
Consumption	DC: 1.3 W max. AC: 5.5 VA max.
Connector	Screw terminals

Environmental specifications

Operating temperature	-25° to +55°
Storage temperature	-30° to +70°

NOTE: R.H. < 90% non-condensing

Input and output insulation

	Power supply	RS485	USB
Power supply	-	4 kV VRMS	4 kV VRMS
RS485	4 kV VRMS	-	0.5 kV VRMS
USB	4 kV VRMS	0.5 kV VRMS	-

Communication

RS485 port

Communication type	Multidrop, bidirectional (static and dynamic variables)
Connection type	Screw terminals 3 wires
Protocol	Modbus RTU
Data	All
Data format	1 start bit, 8 data bits, Parity (None/ Odd/ Even), 1 or 2 stop bit
Configuration parameters	Modbus address (from 1 to 247) Baud rate: 4.8 / 9.6 / 19.2 / 38.4 / 57.6 / 115.2 kbps Parity (None/ Odd/ Even) Stop bit (1 or 2)
Maximum number of connected devices	1 meter x 1 UWPA

USB port

Type	USB2.0/USB3.0
Connection type	Screw terminals 3 wires
Protocol	JBUS/Modbus compatible
Configuration parameters	Modbus address (from 1 to 247) Baud rate: 4.8 / 9.6 / 19.2 / 38.4 / 57.6 / 115.2 kbps Parity (None/ Odd/ Even) Stop bit (1 or 2)

LoRa® and LoRaWAN®

Protocol	LoRa® (private UWP network, in combination with UWPM) or LoRaWAN® (LoRaWAN® network)
Configuration parameters	Transmission interval Authentication type (ABP or OTAA) Appkey or Appskey and Nwkskey
Frequency	EU 868 MHz ISM band
Encryption	Embedded end-to-end AES128 encryption
Transmission interval	Configurable from 5 min to 24 h
Antenna	Included high performance antenna (SMA connector, cable length 2m)
Test function	Push button command for diagnostic or commissioning purposes

Connection Diagrams

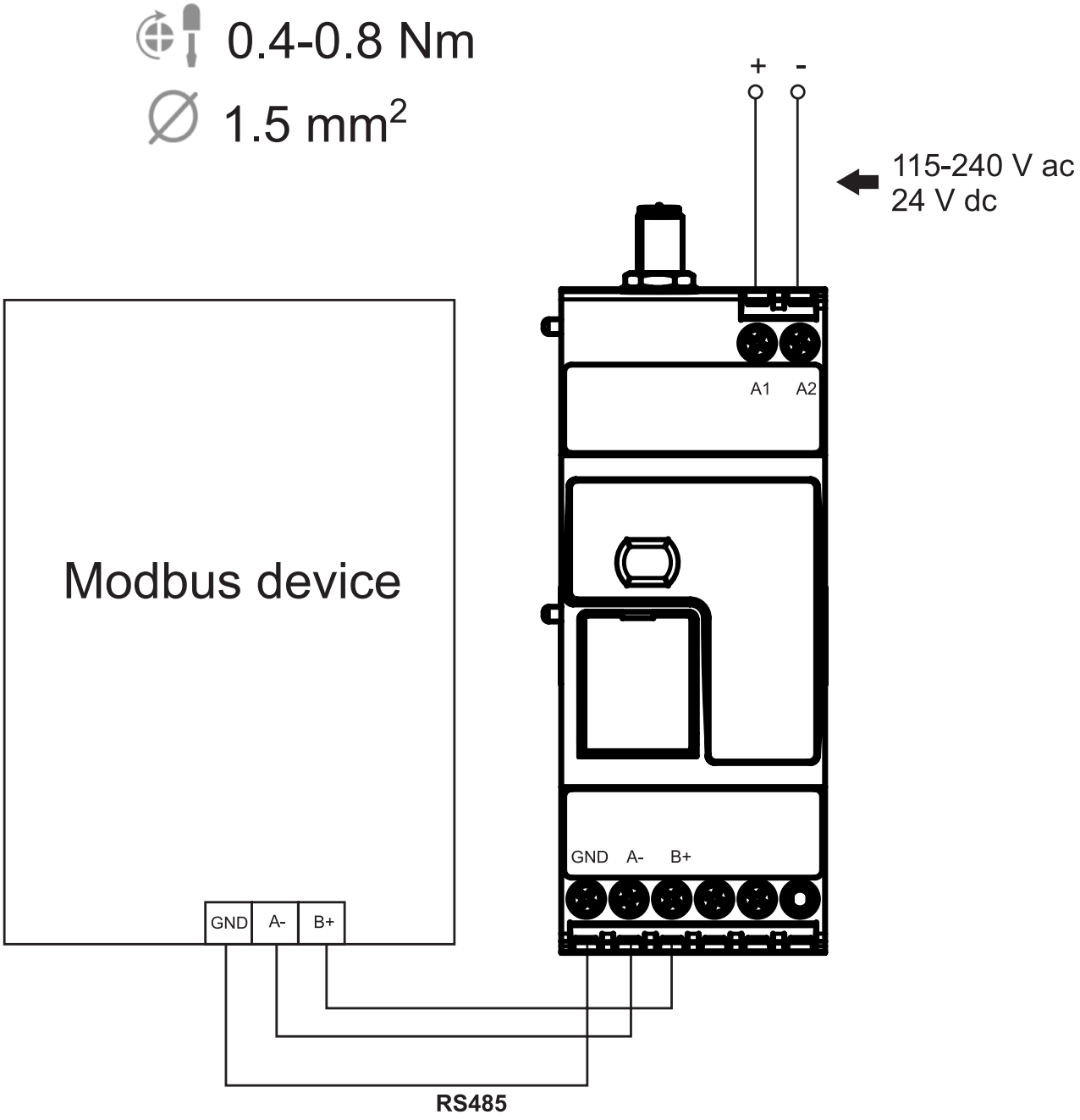

References

Further reading

Document	Where to find it
White paper	www.productselection.net/Pdf/UK/UWP-A-M-Whitepaper.pdf
Instruction manual	www.productselection.net/MANUALS/UK/UWPA_im.pdf

CARLO GAVAZZI compatible components

Purpose	Component name/code key	Notes
Energy analyzers	EM24 (family), EM210 (family)	See relevant datasheet
Energy meters	EM100-300 (family)	See relevant datasheet
Power quality analyzers	WM20-30-40 (family), CPA (family)	See relevant datasheet
Power transducers	ET100-300 (family)	See relevant datasheet
Pulse concentrator	VMU-MC / OC	See relevant datasheet
Power analyzer	WM15	See relevant datasheet

UWPM

Master concentrator gateway

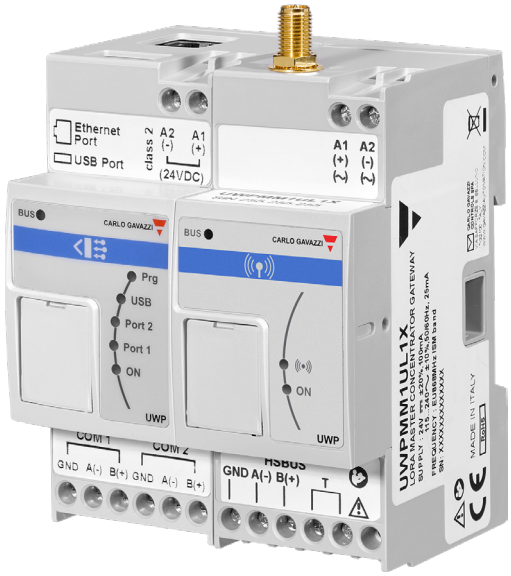

Main features

- Wireless solution with no SIM card (ISM band)
- Data concentrator for up to 50 UWPA endpoints
- Long communication range (up to 10 km in open air)
- Fast commissioning
- Robust and secure communication
- Compatible with Carlo Gavazzi UWP 3.0 platform
- High-performance antenna

Description

UWPM is a master concentrator that permits UWP 3.0 to gather data from multiple UWPA. This allows setting-up and operating a secure and robust wireless data network in the ISM band.

Applications

Energy efficiency monitoring and energy cost allocation, sub-metering in large buildings, big facilities, farms and city areas are the best use cases for LoRa®-based Carlo Gavazzi systems. Thanks to LoRa® long communication range, security and robustness, wireless networks can be easily set-up, without any expenses due to the use of SIM cards or repeaters.

Main functions

- Plug'n play commissioning of a wireless monitoring system based on UWP 3.0 (in combination with UWPA)
- Full ownership of data with no need to rely on any wireless/cloud operator (in combination with UWPA)

Structure

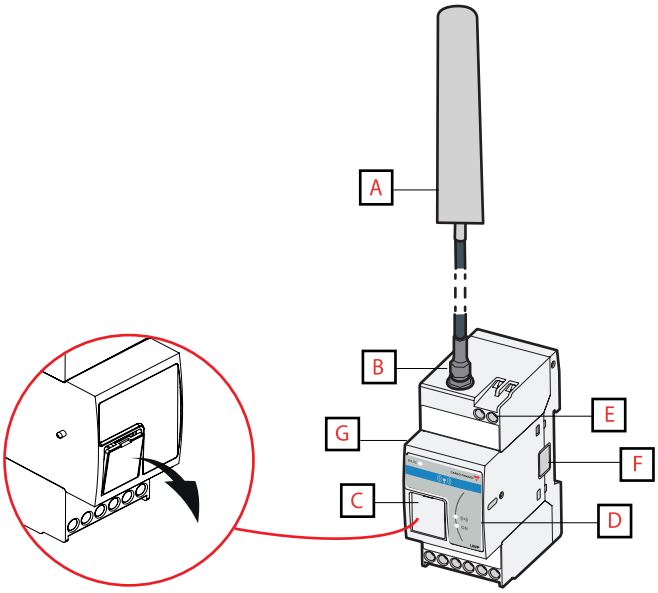

Area	Description
A	High-performance antenna
B	Antenna connector
C	USB port
D	LEDs: Green: Power supply Yellow: HSBus Blue: LoRa®
E	Power supply connection block
F	Right-side female HSBus connector for additional modules
G	Left-side male HSBus connector for UWP 3.0

Special functions

- Fully integrated with UWP 3.0 platform
- Data gathered by UWPM can be logged, displayed, transmitted to other systems thanks to UWP 3.0 powerful capabilities

LED indication

Colour	Status LED	Description
Green	ON	Power supply OK
	OFF	No Power supply
	Fast Blinking	Hardware failure
Yellow	ON	HSBus communication in progress without errors
	OFF	HSBus communication error
	Fast blinking	
Blue	Slow blinking	Receiving message
	Fast blinking	The message is not valid or has been sent by a UWPA not included into the configuration

Features

General

Material	Noryl, self-extinguishing V-0 (UL 94)
Protection degree	Front: IP50 Terminals: IP20
Terminals	Cable Section: 1.5 mm^2 Torque: from 0.4 to 0.8 Nm
Mounting	DIN rail
Dimensions	2-DIN module
Weight (packaging included)	520 g
Antenna cable length	2 m
Antenna dimensions	See picture 2

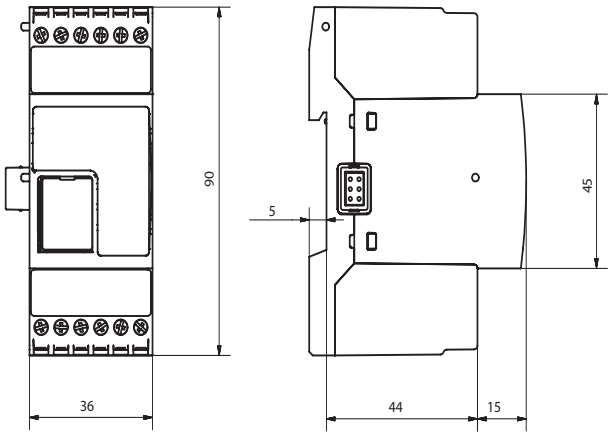

Fig. 3 *UWPM dimensions*

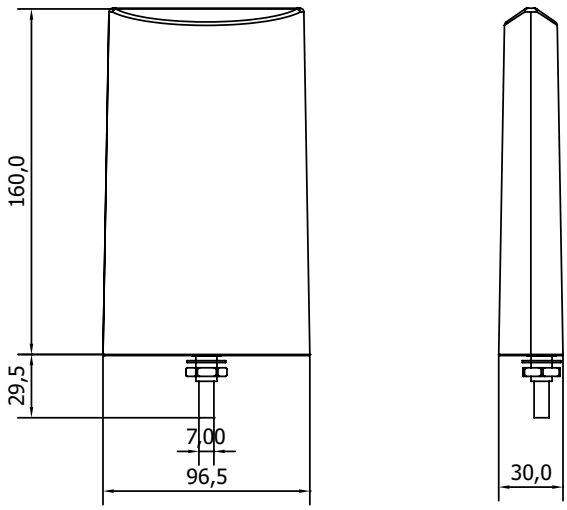

Fig. 4 *High-performance antenna dimensions*

Power supply

Power supply	24 V dc +/-20% 115-240 V ac 50/60 Hz +/-10%
Consumption	DC: 1.3 W max. AC: 5.5 VA max.
Connector	Screw terminals

Environmental specifications

Operating temperature	-25° to +55°
Storage temperature	-30° to +70°

NOTE: R.H. < 90% non-condensing

Communication

Long-range wireless

Protocol	LoRa® (private UWP network, in combination with UWPA)
Configuration parameters	Managed UWPA devices and variables by means of UCS file import
Frequency	EU 868 MHz ISM band
Encryption	Embedded end-to-end AES128 encryption
Antenna	Included high performance antenna (SMA connector, cable length 2m)
Diagnostics	Signal strength UWPA status
UWPA number	Maximum: 50 UWPA per UWPM. The number may change according to the transmission interval and the interferences.

HSBus

Bus type	RS485 high speed bus
Protocol	Internal proprietary protocol
Number of slaves	Max. 3 per UWP 3.0
Connection type	By local bus (left and right connectors) or terminals GND, A(-), B(+) T1, T2: terminalization inputs

UWPA per UWPM and transmission parameters

1 package (max. 8 variables)*

		UCS parameters	
Transmission interval	Maximum number of UWPA per UWPM	Spreading factor	Retry
5 min	10	SF11	1
10 min	10	SF12	1
	50	SF11	2
15 min	50	SF12	2

2 packages (max. 16 variables)*

		UCS parameters	
Transmission interval	Maximum number of UWPA per UWPM	Spreading factor	Retry
10	10	SF11	1
15	10	SF12	1
30 min	10	SF12	1
	50	SF11	2
1 h	50	SF12	2

3 packages (max. 24 variables)*

		UCS parameters	
Transmission interval	Maximum number of UWPA per UWPM	Spreading factor	Retry
15 min	10	SF11	1
30 min	10	SF12	1
1 h	50	SF12	2

**The maximum number of variables for each package depends on their format. The indicated value refers to the real time variables (such as voltage, current, power); with hour counter variables (such as energy) that value has to be halved.*

Note: The SF11 spreading factor, unlike the SF12, reduces the distance and the resilience to interferences of the signal. This reduction is more evident with spreading factors inferior to SF11.

Frequencies

Name	Type	Channel (MHz)	Bandwidth (MHz)	Band	Band duty cycle (%)
FA	Base	868.100	125	M-B1	1
FB	Base	868.300	125	M-B1	1
FC	Base	868.500	125	M-B1	1
F1	Custom	869.900	125	R-B4	1
F2	Custom	867.100	125	L-B0	1
F3	Custom	867.300	125	L-B0	1
F4	Custom	867.500	125	L-B0	1

Connection Diagrams

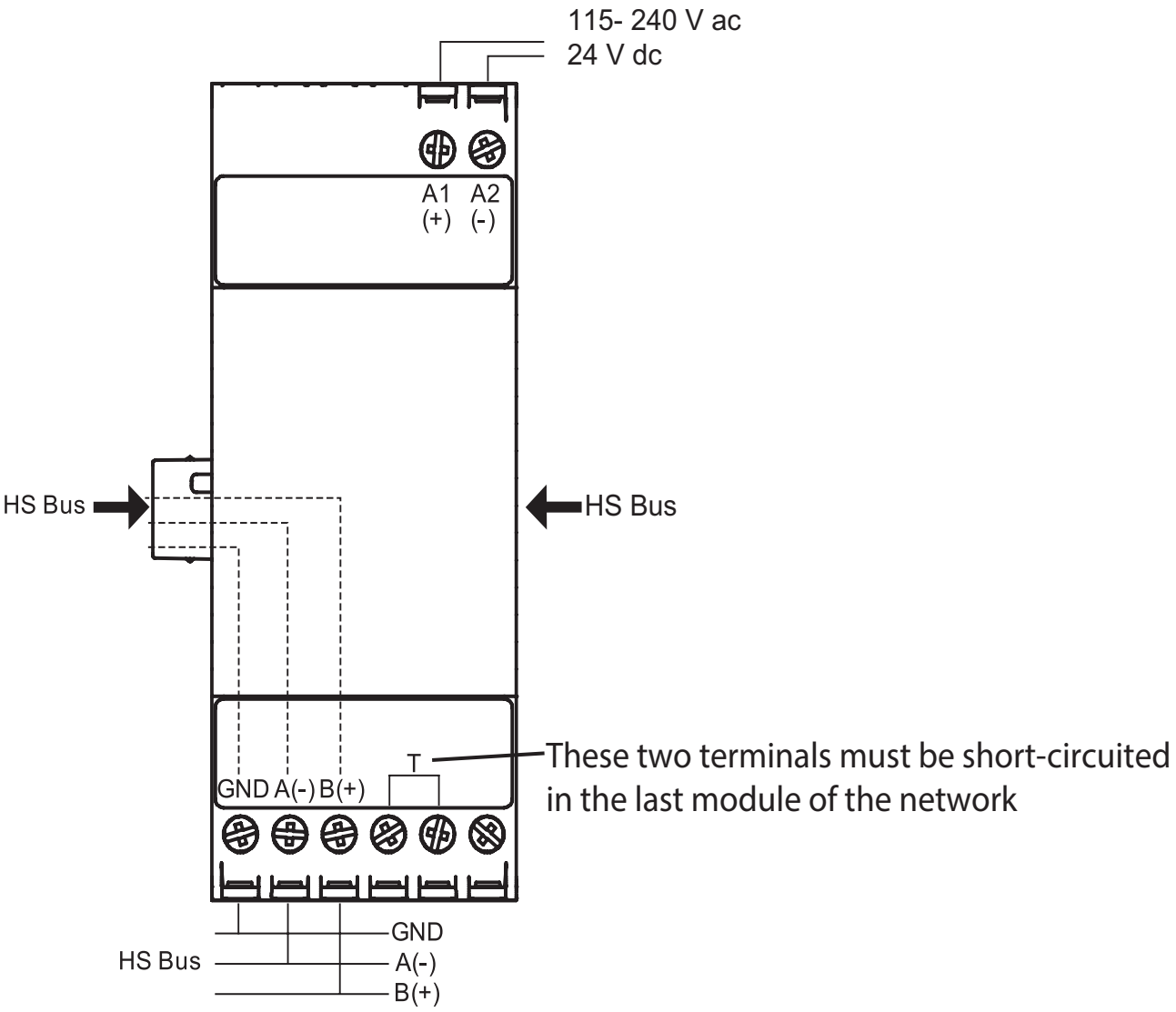

References

Further reading

Document	Where to find it
White paper	www.productselection.net/Pdf/UK/UWP-A-M-Whitepaper.pdf
Instruction manual	www.productselection.net/MANUALS/UK/UWPM_im.pdf

CARLO GAVAZZI compatible components

Purpose	Component name/code key	Notes
Universal web platform	UWP 3.0	See relevant datasheet
Wireless endpoint gateway	UWPA	See relevant datasheet

How to order

UWPA

Code	Description
UWPAM1US1L1X	Wireless endpoint gateway

UWPM

Code	Description
UWPMM1UL1X	Master concentrator gateway

COPYRIGHT ©2019
Content subject to change. Download the PDF: www.productselection.net