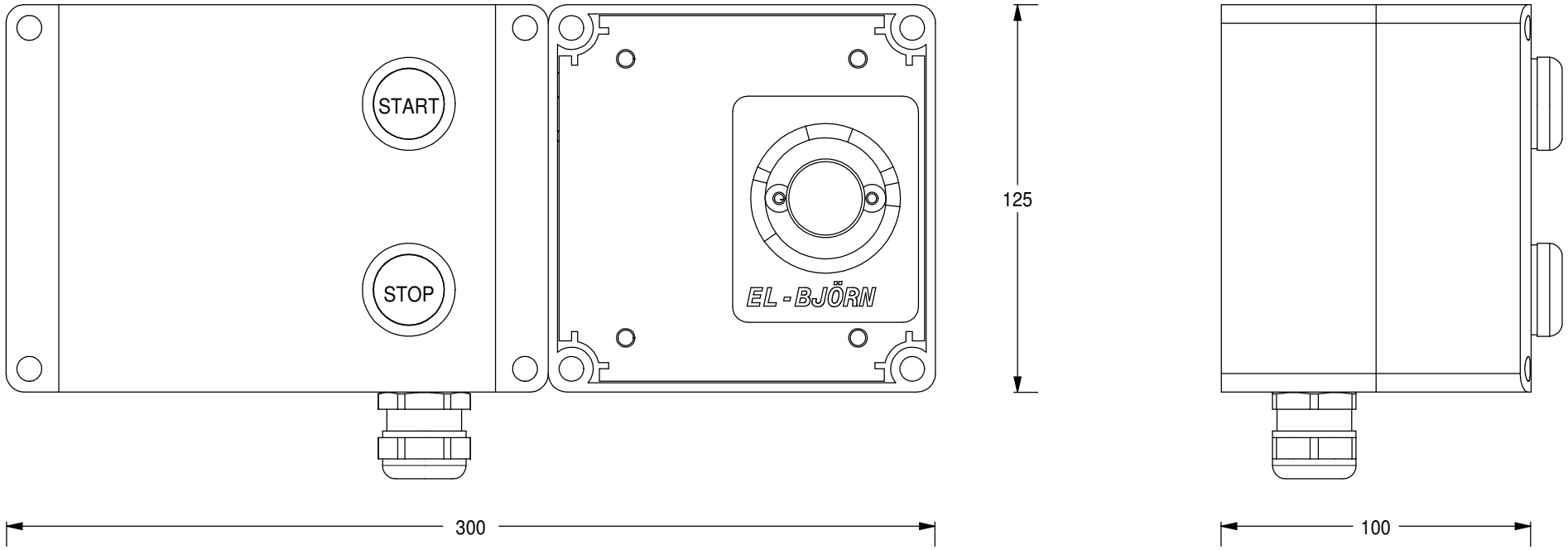

ARTIKELNR./
ARTICLE NO.
E8745053

MÄRKSTRÖM/
CURRENT RATING
A

MEASURING EQUIPMENT

CURR.-TRAFO-SPACE	ENERGY-METER-SPACE

FAST ANSLUTNING/
FIXED CONNECTIONS

<125A	>125A

CEE-OUTLETS
3-POLE/230V

16A	32A	63A	125A

SCHUKO OUTLETS
2-POLE/230V
16A

CEE-OUTLETS
5-POLE/400V

16A	32A	63A	125A

JFB/RCCB

<0,03A	>0,3A	>0,03A & <0,3A

JFB/RCCB
Variable

VIKT/WEIGHT
1,5 kg

This drawing is property of El-Björn. May not be copied, shown or distributed without our written permission.

Timerlåda med Hygrostat
Timer with Humidistat
A 75F/R, A155 F

EL-BJÖRN
www.elbjorn.com

RITAD AV/DRAWN BY	DATUM/DATE	NEXT SHEET	SHEET
CG	140401	2	1
SIGN	REVISION/ISSUE	RITNINGS NR./DRAWING	
	B 11/5 -15	E8745053	

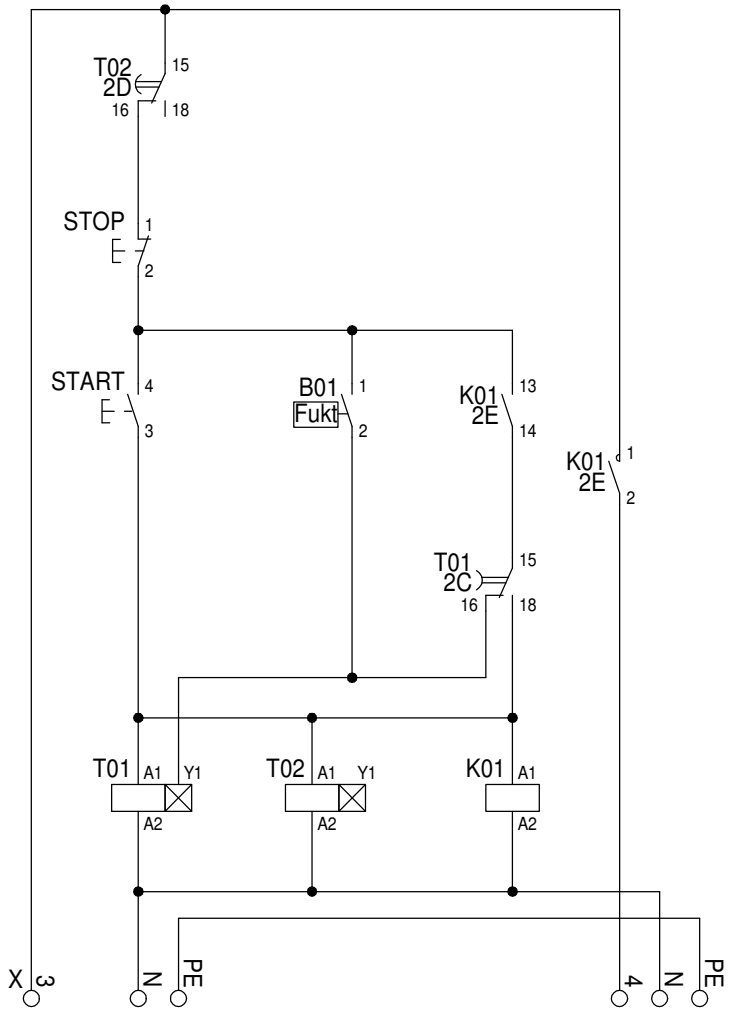

A	B	C	D	E	F	G	H	J	K

ARTIKELNR./ ARTICLE NO.
E8745053

MÄRKSTRÖM/ CURRENT RATING
A

MEASURING EQUIPMENT
CURR.-TRAFO-SPACE | ENERGY-METER-SPACE

FAST ANSLUTNING/ FIXED CONNECTIONS
<125A | >125A

CEE-OUTLETS 3-POLE/230V
16A | 32A | 63A | 125A

SCHUKO OUTLETS 2-POLE/230V
16A

CEE-OUTLETS 5-POLE/400V
16A | 32A | 63A | 125A

JFB/RCCB
<0,03A | >0,3A | >0,03A & <0,3A

JFB/RCCB
Variable

VIKT/WEIGHT
1,5 kg

This drawing is property of El-Björn. May not be copied, shown or distributed without our written permission.

Timerlåda med Hygrostat
Timer with Humidistat
A 75F/R, A155 F

EL-BJÖRN
www.elbjorn.com

RITAD AV/DRAWN BY	DATUM/DATE	NEXT SHEET	SHEET
CG	140401	3	2
SIGN	REVISION/ISSUE	RITNINGS NR./DRAWING	
	A*	E8745053	

A	B	C	D	E	F	G	H	J	K

PC.	Position	Description	Type	Manufacturer	Data	Article No.	E-number(SE)
1	-	Kapsling / Enclosure	SPCP 131310T	Ensto	125 x 125 x 100	KOT 94136	
1		Kapsling / Enclosure	SABP 131810G	Ensto	175 x 125 x 100	KOT 20483	
1	B01	Hygrostat / Humidistat	J10-1000	Ranco		4177350	
1	K01	Kontaktor / Contactor	LC1K0610M7	Schneider Electric	20A, 230VAC	LC1K0610M7	3230604
1	START	Kontaktdon / Connectors	800F-PX10	Allen-Bradley	NO	800F-PX10	3720978
1		Tryckknapp / Pushbutton	800FM-F301	Allen-Bradley	Start, Grön / Green	800FM-F301	3720777
1	STOP	Kontaktdon / Connectors	800F-PX01	Allen-Bradley	NC	800F-PX01	3720979
1		Tryckknapp / Pushbutton	800FM-F402	Allen-Bradley	Stop, Röd / Red	800FM-F402	3720781
2	T01, T02	Tidrelä / Time Relay	EMER8	Crouzet	24-240V	88829198	
1	X	Ändstöd / End bracket		Schneider Electric		NSYTRAAB35	2916002
2		Radplint / Terminal	Gul/Grön / Yellow/Green	Schneider Electric	4mm²	NSYTRV42PE	2916257
2		Radplint / Terminal	Blå / Blue	Schneider Electric	4mm²	NSYTRV42BL	2916255
2		Radplint / Terminal	Grå / Grey	Schneider Electric	4mm²	NSYTRV42	2916254

ARTIKELNR./ ARTICLE NO.
E8745053

MÄRKSTRÖM/ CURRENT RATING
A

MEASURING EQUIPMENT
CURR.-TRAFO-SPACE | ENERGY-METER-SPACE

FAST ANSLUTNING/ FIXED CONNECTIONS
<125A | >125A

CEE-OUTLETS 3-POLE/230V
16A | 32A | 63A | 125A

SCHUKO OUTLETS 2-POLE/230V
16A

CEE-OUTLETS 5-POLE/400V
16A | 32A | 63A | 125A

JFB/RCCB
<0,03A | >0,3A | >0,03A & <0,3A

JFB/RCCB
Variable

VIKT/WEIGHT
1,5 kg

This drawing is property of El-Björn. May not be copied, shown or distributed without our written permission.

Timerlåda med Hygrostat
Timer with Humidistat
A 75F/R, A155 F

EL-BJÖRN
www.elbjorn.com

RITAD AV/DRAWN BY	DATUM/DATE	NEXT SHEET	SHEET
CG	140401	4	3
SIGN	REVISION/ISSUE	RITNINGS NR./DRAWING	
	A*	E8745053	

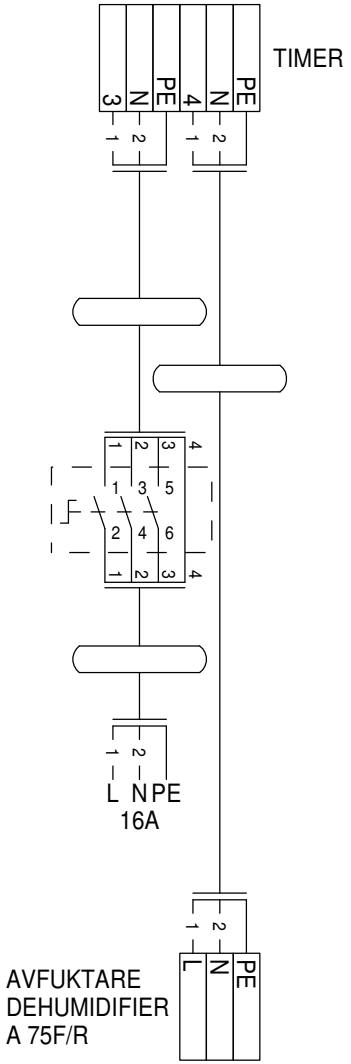

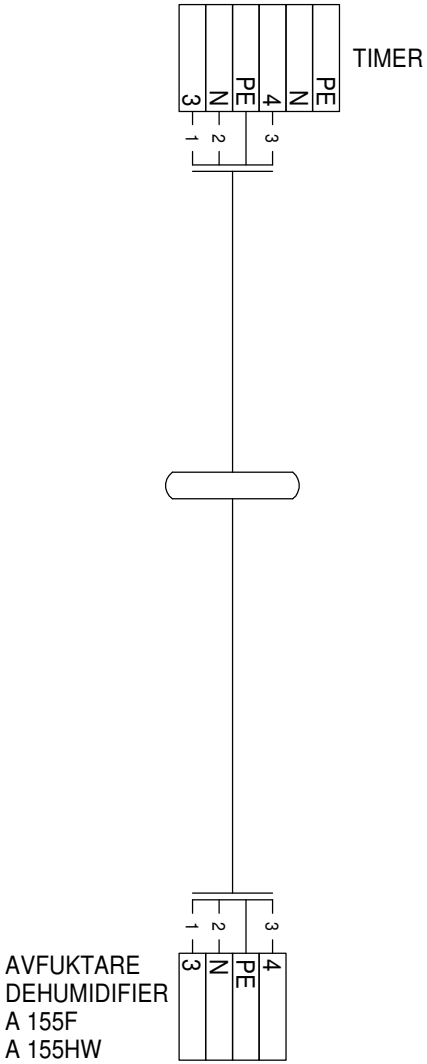

ARTIKELNR./ARTICLE NO.
E8745053

MÄRKSTRÖM/CURRENT RATING
A

MEASURING EQUIPMENT
CURR.-TRAFO-SPACE | ENERGY-METER-SPACE

FAST ANSLUTNING/FIXED CONNECTIONS
<125A | >125A

CEE-OUTLETS 3-POLE/230V
16A | 32A | 63A | 125A

SCHUKO OUTLETS 2-POLE/230V
16A

CEE-OUTLETS 5-POLE/400V
16A | 32A | 63A | 125A

JFB/RCCB
<0,03A | >0,3A | >0,03A & <0,3A

JFB/RCCB
Variable

VIKT/WEIGHT
1,5 kg

This drawing is property of El-Björn. May not be copied, shown or distributed without our written permission.

Timerlåda med Hygrostat
Timer with Humidistat
A 75F/R, A155 F

EL-BJÖRN
www.elbjorn.com

RITAD AV/DRAWN BY	DATUM/DATE	NEXT SHEET	SHEET
CG	140401		4
SIGN	REVISION/ISSUE	RITNINGS NR./DRAWING	
	A*	E8745053	